EXHIBIT A
TOTAL PROJECT BUDGET
TOWN OF NATICK
JOHN F. KENNEDY MIDDLE SCHOOL

PROJECT FUNDING AGREEMENT

Total Project Budget

Town of Natick
John F. Kennedy Middle School

Total Project Budget: All costs associated with the project are subject to 963 CMR 2.16(5)	Estimated Budget	Scope Items Excluded from the Estimated Basis of Maximum Facilities Grant or Otherwise Ineligible	Estimated Basis of Maximum Total Facilities Grant[1]	Estimated Maximum Total Facilities Grant[1]
Feasibility Study Agreement				
OPM Feasibility Study	$175,000	$0	$175,000	
A&E Feasibility Study	$480,177	$0	$480,177	
Environmental & Site	$83,698	$0	$83,698	
Other	$11,125	$0	$11,125	
Feasibility Study Agreement Subtotal	**$750,000**	**$0**	**$750,000**	**$361,575**
Administration				
Legal Fees	$25,000	$25,000	$0	**$0**
Owner's Project Manager				
Design Development	$124,000	$0	$124,000	
Construction Contract Documents	$111,800	$0	$111,800	
Bidding	$44,720	$0	$44,720	
Construction Contract Administration	$2,498,671	$0	$2,498,671	
Closeout	$67,173	$0	$67,173	
Extra Services	$0	$0	$0	
Reimbursable & Other Services	$5,000	$0	$5,000	
Cost Estimates	$66,000	$0	$66,000	
Advertising	$1,000	$0	$1,000	
Permitting	$75,000	$0	$75,000	
Owner's Insurance	$55,000	$0	$55,000	
Other Administrative Costs	$50,000	$0	$50,000	
Administration Subtotal	**$3,123,364**	**$25,000**	**$3,098,364**	**$1,493,721**
Architecture and Engineering				
Basic Services				
Design Development	$2,405,416	$0	$2,405,416	
Construction Contract Documents	$3,720,949	$0	$3,720,949	
Bidding	$273,571	$0	$273,571	
Construction Contract Administration	$1,595,561	$0	$1,595,561	
Closeout	$143,295	$0	$143,295	
Other Basic Services	$0	$0	$0	
Basic Services Subtotal	**$8,138,792**	**$0**	**$8,138,792**	
Reimbursable Services				
Construction Testing	$36,650	$0	$36,650	
Printing (over minimum)	$30,000	$0	$30,000	
Other Reimbursable Costs	$199,950	$0	$199,950	
Hazardous Materials	$106,975	$0	$106,975	
Geotechnical & Geo-Environmental	$190,345	$0	$190,345	
Site Survey	$49,865	$0	$49,865	
Wetlands	$40,000	$0	$40,000	
Traffic Studies	$13,200	$0	$13,200	
Architectural/Engineering Subtotal	**$8,805,777**	**$0**	**$8,805,777**	**$4,245,265**
CM at Risk Preconstruction Services				
Pre-Construction Services	$0	**$0**	$0	**$0**
Site Acquisition				
Land / Building Purchase	$0	$0	$0	
Appraisal Fees	$0	$0	$0	
Recording fees	$0	$0	$0	
Site Acquisition Subtotal	**$0**	**$0**	**$0**	**$0**
Construction Costs				
SUBSTRUCTURE				
Foundations	$2,738,705	$0		
Basement Construction	$0	$0		
SHELL				
Super Structure	$7,622,103	$0		
Exterior Closure	$0	$0		
Exterior Walls	$6,871,683	$0		
Exterior Windows	$2,739,101	$0		
Exterior Doors	$168,218	$0		
Roofing	$2,212,848	$0		
INTERIORS				
Interior Construction	$9,282,006	$0		
Staircases	$548,614	$0		
Interior Finishes	$4,332,224	$0		
SERVICES				
Conveying Systems	$509,000	$0		
Plumbing	$2,904,835	$0		
HVAC	$7,085,764	$0		
Fire Protection	$750,546	$0		
Electrical	$8,837,737	$0		
EQUIPMENT & FURNISHINGS				
Equipment	$1,236,484	$0		
Furnishings	$513,993	$0		
SPECIAL CONSTRUCTION & DEMOLITION				
Special Construction	$50,000	$0		
Existing Building Demolition	$919,080	$0		
In-Building Hazardous Material Abatement	$513,000	$0		
Asbestos Containing Floor Material Abatement	$150,000	$150,000		
Other Hazardous Material Abatement	$0	$0		
BUILDING SITEWORK				
Site Preparation	$1,606,330	$0		
Site Improvements	$3,954,009	$0		
Site Civil / Mechanical Utilities	$1,577,654	$0		
Site Electrical Utilities	$743,020	$0		
Other Site Construction	$0	$0		
Scope Excluded Site Cost		$3,212,704		
Construction Trades Subtotal	$67,866,954	$3,362,704		
Contingencies (Design and Pricing)	$6,786,695	$336,270		
D/B/B Sub-Contractor Bonds	$678,670	$33,627		
D/B/B Insurance	$1,153,738	$57,166		
D/B/B General Conditions	$5,848,077	$289,763		
D/B/B Overhead & Profit	$2,036,009	$100,881		

Total Project Budget

Town of Natick
John F. Kennedy Middle School

Total Project Budget: All costs associated with the project are subject to 963 CMR 2.16(5)	Estimated Budget	Scope Items Excluded from the Estimated Basis of Maximum Facilities Grant or Otherwise Ineligible	Estimated Basis of Maximum Total Facilities Grant[1]	Estimated Maximum Total Facilities Grant[1]
GMP Insurance	$0	$0		
GMP Fee	$0	$0		
GMP Contingency	$0	$0		
Escalation to Mid-Point of Construction	$3,189,747	$158,047		
Ineligible Auditorium & PE Areas beyond Guidelines		$5,334,438		
Overall Excluded Construction Cost		$17,191,607		
Construction Budget	**$87,559,890**	**$26,864,504**	**$60,695,386**	**$29,261,246**
Alternates				
Ineligible Work Included in the Base Project	$0	$0	$0	
Alternates Included in the Total Project Budget	$0	$0	$0	
Alternates Excluded from the Total Project Budget	$0		$0	
Subtotal to be Included in Total Project Budget	**$0**	**$0**	**$0**	**$0**
Miscellaneous Project Costs				
Utility Company Fees	$200,000	$0	$200,000	
Testing Services	$100,000	$0	$100,000	
Swing Space / Modulars	$0	$0	$0	
Other Project Costs (Mailing & Moving)	$70,000	$70,000	$0	
Misc. Project Costs Subtotal	**$370,000**	**$70,000**	**$300,000**	**$144,630**
Furnishings and Equipment				
Furniture, Fixtures, and Equipment	$1,795,000	$595,000	$1,200,000	
Technology	$2,406,910	$1,206,910	$1,200,000	
FF&E Subtotal	**$4,201,910**	**$1,801,910**	**$2,400,000**	**$1,157,040**
Soft Costs that exceed 20% of Construction Cost		$0		
Project Budget	**$104,810,941**	**$28,761,414**	**$76,049,527**	**$36,663,477**

Board Authorization	
Design Enrollment	1,000
Total Building Gross Floor Area (GSF)	182,195
Total Project Budget (excluding Contingencies)	$104,810,941
Scope Items Excluded or Otherwise Ineligible	$28,761,414
Third Party Funding (Ineligible)	$0
Estimated Basis of Maximum Total Facilities Grant[1]	$76,049,527
Reimbursement Rate[3]	48.21%
Est. Max. Total Facilities Grant (before recovery)[1]	$36,663,477
Cost Recovery[4]	$12,929
Estimated Maximum Total Facilities Grant[1]	$36,650,548

Construction Contingency[2]	$4,249,059
Ineligible Construction Contingency[2]	$3,373,460
"Potentially Eligible" Construction Contingency[2]	$875,599
Owner's Contingency[2]	$500,000
Ineligible Owner's Contingency[2]	$0
"Potentially Eligible" Owner's Contingency[2]	$500,000
Total Potentially Eligible Contingency[2]	$1,375,599
Reimbursement Rate[3]	48.21%
Potential Additional Contingency Grant Funds[2]	$663,176
Maximum Total Facilities Grant	$37,313,724
Total Project Budget	$109,560,000

43.63	Reimbursement Rate Before Incentive Points
4.58	Total Incentive Points[3]
48.21%	MSBA Reimbursement Rate

NOTES
This document was prepared by the MSBA based on a preliminary review of information and estimates provided by the Town of Natick for the John F. Kennedy School project. Based on this preliminary review, certain budget, cost and scope items have been determined to be ineligible for reimbursement, however, this document does not contain a final, exhaustive list of all budget, cost and scope items which may be ineligible for reimbursement by the MSBA. Nor is it intended to be a final determination of which budget, cost and scope items may be eligible for reimbursement by the MSBA. All project budget, cost and scope items shall be subject to review and audit by the Authority, and the Authority shall determine, in its sole discretion whether any such budget, cost and scope items are eligible for reimbursement. The MSBA may determine that certain additional budget, cost and scope items are ineligible for reimbursement.

1 - The Estimated Basis of Total Facilities Grant and Estimated Maximum Facilities Grant amounts appearing in the "MSBA Board Approved Budget" column do not include any potentially eligible contingency funds and are subject to review and audit by the MSBA. The Estimated Basis of Total Facilities Grant, Estimated Maximum Facilities Grant, and Maximum Total Facilities Grant amounts appearing in the "Proposed Revised PFA Budget" column have been adjusted to account for construction bids received in accordance with Section 2.2 of the PFA and any budget revision requests submitted and approved by the MSBA as of the Date noted in the Proposed Revised Budget PFA column of the PFA Amendment. These amounts are also subject to further review and audit by the MSBA.

2 - Pursuant to Section 3.20 of the Project Funding Agreement and the applicable policies and guidelines of the Authority, any project costs associated with the reallocation or transfer of funds from either the Owner's contingency or the Construction contingency to other budget line items shall be subject to review by the Authority to determine whether any such costs are eligible for reimbursement by the Authority. All costs are subject to review and audit by the MSBA.

3 - The MSBA has provisionally included two (2) incentive points for energy efficiency, subject to the District meeting certain sustainability requirements for the project. If the District does not meet the requirements for the energy efficiency, the District will not qualify for these incentive points and the MSBA will adjust the reimbursement rate accordingly.

4 - Cost associated with the commissioning of ineligible square footage will result in the recovery of a portion of the overall commissioning cost. The MSBA has calculated this recovery of funds to be $12,929. A total of $12,929 has been deducted from the Estimated Maximum Total Facilities Grant and the Maximum Total Facilities Grant.

Exhibits on CD Template

MSBA Project No.: 201501980305
Project: John F. Kennedy Middle School
District: Town of Natick

INDEX OF EXHIBITS FOR PROJECT FUNDING AGREEMENT

The enclosed CD contains documents from Exhibits B and E of the PROJECT FUNDING AGREEMENT for the John F. Kennedy Middle School Project. Below is a description of the document(s) included in each Exhibit:

Exhibit B – Scope:

- Project Narrative
- Scope Drawings
- Room Data Sheets
- Outline Specifications, Table of Contents
- Hazardous Materials Report
- Code Narrative
- LEED Scorecard
- Space Summary

Exhibit E – Site:

- Site Narrative
- Site Drawings
- Geotechnical Study Report
- Traffic Analysis

Introduction

Brief Summary of Preferred MSBA Board Solution

Preferred MSBA Board Solution

The Preferred Schematic Design solution was approved on October 25, 2017 by the MSBA Board of Directors. The Preferred Schematic Design solution is an "all new" 182,195 gsf middle school serving 1,000 students in grades 5-8. The new school will be located on the existing 35.2-Acre Kennedy Middle School and Brown Elementary campus located at 165 Mill Street in Natick, MA. The existing Kennedy Middle School will be demolished after the new school is substantially completed. The main entry drive and site circulation will be modified to improve bus, parent, and staff circulation for both the Brown and Kennedy Schools. A new multi-use synthetic turf field will replace the existing sports field at the northeast corner of the site. A new basketball court will be located close to the Brown Elementary School for shared school and community use. The existing trail system currently located at the south and west edges of the site will be improved and connected to the new trail system proposed to the west edge of the site. The proposed site will accommodate approximately 285 to 305 parking spaces.

Project Description & Key Elements of the Design

There are many positive attributes to the 4-story, new school option that ultimately made it an easy selection as a Preferred Schematic Option for the School Department and School Building Committee. The new design places each grade on a dedicated floor level and allows the subdivision of each grade level into three neighborhoods. If the administration chooses, the school can be subdivided into a lower 5th/6th grade school on floors 1 and 2, and an upper 7th/8th grade school on floors 3 and 4. The key to subdividing the student population into an upper and lower school would be the creation of two student commons areas. The 7,500 sf student dining space can be separated into two 3,750 sf areas; the lower school dining area would be located on level one and the upper school dining area would be located on level three. Similarly, the kitchen program of 2,300 sf would be subdivided into a 1,700 sf main kitchen on floor 1 and a 600 sf satellite kitchen on floor 3. The academic classroom core allows program space to be placed on either end of the core, offering increased flexibility of site placement which the other options did not allow.

The Preferred Schematic option maximizes the open green space to the south of the Brown Elementary School by placing more educational program space adjacent to the southwest facade of the existing middle school. The new middle school athletic center is located to the southeast, adjacent to the new fields, and the performing arts space is located to the north, adjacent to the Brown School, so that it can be shared by the Brown Elementary School community.

The following is a summary of the preferred option's attributes:

- Provides a clearly visible, identifiable, and direct main entry; in alignment with the main entry access drive from Mill Street.
- The academic core continues to allow each grade level to be clearly divided into three neighborhoods while allowing placement of program space along either side.
- Simplified building organization and circulation.
- Best site layout for the Brown School, Kennedy Middle School, and the community, creating an overall school campus.
- Ideal location of the Performing Arts program (adjacent to the Brown School) and the Health & Physical Education program (adjacent to the new athletic fields).
- Bus and parent circulation remain in front of the Brown and Kennedy schools.
- Secondary entry is in alignment with the main entry and allows a direct physical and visible connection from the west-facing main entry plaza to the community fields and amenities to the east.
- Preservation of the Brown Elementary School view corridor from existing entry drive.
- Preservation of open green space in front of the existing Brown Elementary School.

- Improved distribution of parking and site circulation.
- The 4-story academic classroom core is flanked by 2-story program elements to help reduce the scale of academic core.
- Placement of multi-story academic core is the most remote location possible in Site Zone 3 to the abutters of Barnesdale Road and Surrey Lane.
- No impact to bordering vegetated wetlands.

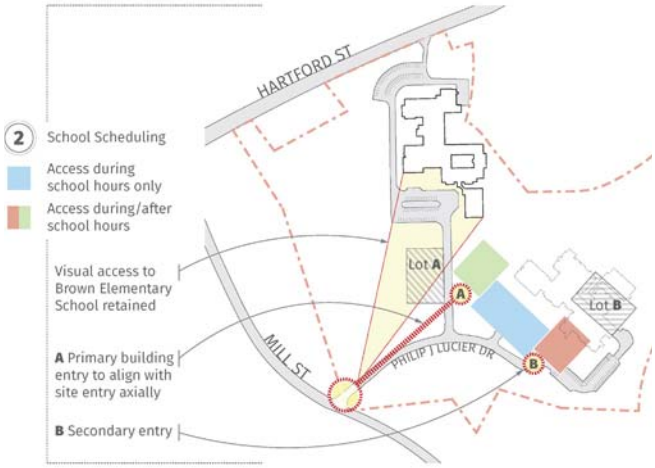

The Kennedy Middle School Building Committee and Natick Public Schools overwhelmingly endorsed the Preferred Schematic option.

The Owner's Project Manager presented to the Kennedy Middle School Building Committee the construction delivery method on November 15, 2017. The Committee evaluated the advantages and disadvantages of Design Bid Build (M.G.L. c. 149) and Construction Manager at Risk (M.G.L. c. 149A) delivery methods for the new school project. The KMSBC will determine the construction delivery method at the next scheduled meeting.

The Total Project Budget for the new school option is projected to be approximately $110 Million.

Building Construction	$78,870,000
Site Construction	$8,450,000
All soft costs: Consultant Fees, Administrative Costs, FF&E, Technology	$17,430,000
Contingencies	$4,760,000
Total Project Budget	$109,510,000

Based on early budgeting, the projected cost for the new Natick Kennedy Middle School could be on the order of $110 Million exclusive of MSBA reimbursement. The Town of Natick maintains a healthy balance sheet and its current debt load is well within the recommended level. Currently, the Town has a Standard and Poor rating of AAA. Financing for this project will be based upon a successful debt exclusion override scheduled in March 2018. The Town of Natick is confident that it can acquire bonded financing in excess of $110 Million when it is approved by the citizens of Natick in March 2018. The only other project the Town is currently engaged in is a fire station project. The budget for the fire station is approximately $11.5 Million with an estimated start date of January/February 2018 with completion twelve months later.

Currently, there are no alternates included in the project scope. Please refer to the Total Project Budget within this report.

Community Outreach Program

To engage the community in the project, the School Department has implemented a communications plan using traditional and social media channels. The Natick Public Schools communication strategy works to build public understanding (and support) for the District through stakeholder engagement by working collaboratively with students, parents, staff, and Natick community members.

Natick's communications efforts focus on consistent public and media relations, internal and external engagement, and timely updates through public communications channels. Natick Public Schools promotes excellence in education, learning in action, and highlight special events and award recognitions. All of this is accomplished through community relations, media relations, photography, press releases, public information, and video productions.

Assistant Superintendent of Schools, Anna Nolin, and Communications Specialist, Christina Maryland, oversee and monitor press releases and announcements to the

community. They oversee the operations and maintenance of the web site (https://sites.google.com/a/natickps.org/kms-building-project/home) which provides links to reports and materials submitted to the MSBA as well as social media channels on Facebook (Natick-Public-Schools) and Twitter (NatickSchools@natickps). Traction on social media is strong and closely monitored to ensure the information is easily accessible to residents to garner their support for the Kennedy Middle School project.

The School Department used social media advertising on Facebook to drive awareness and attendance at the two public forums held on May 31st, July 12th, and more recently on October 10th, as well as continuing engagement with design and progress. On September 27th, a Kennedy Middle School open-house was held for parents and students. The Preferred Schematic Design site plan, floor plans, and exterior renderings were presented to the general public for review and comment. In addition, Facebook-boosted posts target Natick parents with children of all ages to reach those who will benefit the most from the middle school project. The media mix is intended, however, to ensure that all voters learn about the value of the project.

In addition to the social media outreach, the Kennedy Middle School Building Committee holds two public meetings every month and begins each meeting with opportunities for input from the public. Additionally, the Kennedy Middle School Building Committee established three (3) televised public forums that were for the specific purpose of presenting, in detail, all options evaluated by the KMSBC and School Department, conducting an open discussion, and receiving feedback from the public. The open public forums were attended by residents, local business owners, faculty, staff, students, parents, Town Officials, Building Committee Members, School Administration, and others.

1 FIRST FLOOR - FIRE SAFETY
1" = 20'-0"

FIRST FLOOR FIRE SAFETY ANALYSIS:

TABLE 601 FIRE RESISTANCE RATING REQUIREMENTS FOR BUILDING ELEMENTS

Building Element	Type IIIA
Primary structural frame Including columns, girders, trusses, & braces	1
Bearing walls Exterior Interior	 2 1
Exterior Nonbearing walls and partitions	See Table 602
Interior Nonbearing walls and partitions	0
Floor construction and secondary members Including supporting beams & joists	1
Roof construction and secondary members Including supporting beams & joists	1 (b,c)

b. Except in Group F-1, H, M and S-1 Occupancies, fire protection of structural members shall not be required, including protection of roof framing and decking where every part of the roof construction is 20 feet or more above any floor immediately below. Fire-retardant-treated wood members shall be allowed to be used for such unprotected members.

c. In all occupancies, heavy timber shall be allowed where a 1-hour or less fire-resistance rating is required.

Chapter 10: Means of Egress
Section 1002 Definitions
Common Path of Egress Travel: That portion of the exit access travel distance measured from the most remote point within a story to that point where the occupants have separate access to two exits or exit access doorways.
Floor Area, Net: The actual occupied area not including unoccupied accessory areas such as corridors, stairways, ramps, toilet rooms, mechanical rooms and closets.

Means of Egress Sizing
1005.3.2 Other egress components
Exceptions:
1. For other than Group H and I-2 Occupancies, the capacity, in inches, of means of egress components other than stairways shall be calculated by multiplying the occupant load served by such component by a means of egress capacity factor of 0.15 inch per occupant in buildings equipped throughout with an automatic sprinkler system installed in accordance with Section 903.3.1.1 or 903.3.1.2 and an emergency voice/alarm communication system in accordance with Section 907.5.2.2.

Required Egress Width:
3,116 Occupants x 0.15 inches per Occupant = 468 inches
Designed Egress Width: = 1,155 inches
* 33" egress width used for 36" door

A3 architects
526 Boston Post Rd Wayland, MA
508.358.0790 www.a3architects.com

Copyright © 2017 - A3 Architects, LLC

KENNEDY MIDDLE SCHOOL
165 MILL STREET
NATICK, MA 01760

KEYNOTE LEGEND:

FIRE SAFETY PLAN LEGEND:

- # — OCCUPANT LOAD
- ROOM NAME 101 — ROOM TAG
- FVC — FIRE VALVE OR HOSE CABINET WITH EXTINGUISHER
- FEC — FIRE EXTINGUISHER CABINET
- FE — WALL MOUNTED FIRE EXTINGUISHER
- A — ACCESSORY SPACE
- 192 — TRAVEL DISTANCE IN FEET
- 2 HR FIRE BARRIER
- 2 HR SHAFT WALL
- 1 HR FIRE BARRIER
- PRIMARY EXIT
- PLACEHOLDER — 2-HOUR FIRE RATING AT UNDERSIDE OF ROOF DECK & STRUCTURE, AT TOP OF ELEVATOR SHAFTS, ELEVATOR MACHINE ROOM CEILINGS AND WHERE SHAFTS TO NOT EXTEND TO THE BOTTOM OF THE BUILDING.
- PLACEHOLDER — 1-HOUR FIRE RATING AT UNDERSIDE OF ROOF DECK & STRUCTURE

GENERAL NOTES:

1. PROVIDE 2-A MINIMUM RATING SINGLE EXTINGUISHER THROUGHOUT - PER NFPA-10 c 2007
2. PROVIDE 20-B MINIMUM EXTINGUISHER RATING (ORDINARY HAZARD) PER NFPA-10 c 2007 AT THE FOLLOWING LOCATIONS:
   KITCHEN
   MECHANICAL
   ELEVATOR EQUIPMENT ROOMS
   CAFETERIA/DINING
   CUSTODIAN RECEIVING AND SUPPLY
   CUSTODIAN WORK/STORAGE
1. PROVIDE FIRE RATED DOORS AND GLAZING IN WALLS DENOTED AS 1 AND 2 HOUR FIRE BARRIER ASSEMBLY ON PLANS G0.02 TO G0.05
2. FLOOR ASSEMBLY TO BE 1-HOUR FIRE RATED (UL DESIGN NO. D902)

NORTH ARROW

SCHEMATIC DESIGN

KEYPLAN

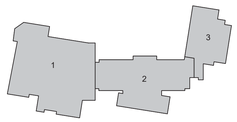

DRAWING NAME:

FIRST FLOOR FIRE SAFETY PLAN

DRAWN BY:	JPT
REVIEWED BY:	JPT
SCALE:	As indicated
JOB NO.:	1605.00
DATE:	DEC. 21, 2017

DRAWING NUMBER: G0.02

1 SECOND FLOOR - FIRE SAFETY
1" = 20'-0"

SECOND FLOOR FIRE SAFETY ANALYSIS:

TABLE 601 FIRE RESISTANCE RATING REQUIREMENTS FOR BUILDING ELEMENTS

Building Element	Type IIIA
Primary structural frame Including columns, girders, trusses, & braces	1
Bearing walls Exterior Interior	 2 1
Exterior Nonbearing walls and partitions	See Table 602
Interior Nonbearing walls and partitions	0
Floor construction and secondary members Including supporting beams & joists	1
Roof construction and secondary members Including supporting beams & joists	1 (b,c)

b. Except in Group F-1, H, M and S-1 Occupancies, fire protection of structural members shall not be required, including protection of roof framing and decking where every part of the roof construction is 20 feet or more above any floor immediately below. Fire-retardant-treated wood members shall be allowed to be used for such unprotected members.

c. In all occupancies, heavy timber shall be allowed where a 1-hour or less fire-resistance rating is required.

Chapter 10: Means of Egress
Section 1002 Definitions
Common Path of Egress Travel: That portion of the exit access travel distance measured from the most remote point within a story to that point where the occupants have separate access to two exits or exit access doorways.
Floor Area, Net: The actual occupied area not including unoccupied accessory areas such as corridors, stairways, ramps, toilet rooms, mechanical rooms and closets.

Means of Egress Sizing
1005.3.1 Stairways: The capacity, in inches, of means of egress stairways shall be calculated by multiplying the occupant load served by such stairways by a means of egress capacity factor of 0.3 inch per occupant. Where stairways serve more than one story, only the occupant load of each story considered individually shall be used in calculating the required capacity of the stairways serving that story.

Exceptions:

1. For other than Group H and I-2 Occupancies, the capacity, in inches, of means of egress stairways shall be calculated by multiplying the occupant load served by such stairways by a means of egress capacity factor of 0.2 inch per occupant in buildings equipped throughout with an automatic sprinkler system installed in accordance with Section 903.3.1.1 or 903.3.1.2 and an emergency voice/alarm communication system in accordance with Section 907.5.2.2.

Total width Means of Egress in inches provided:
Stair 2 = 62 Inches
Stair 3 = 42 Inches
Stair 4 = 60 Inches
Stair 5 = 60 Inches
Stair 6 = 48 Inches

Total Design Egress Width = 272 Inches

Second Floor Occupants = 1,122 occupants
Required Egress Width
1,122 Occupants x 0.2 inches per occupant = 225 Inches
Design Egress Width = 272 Inches

ai3 architects
526 Boston Post Rd Wayland, MA
508.358.0790 www.ai3architects.com

Copyright © 2017 - AI3 Architects, LLC

KENNEDY MIDDLE SCHOOL
165 MILL STREET
NATICK, MA 01760

KEYNOTE LEGEND:

FIRE SAFETY PLAN LEGEND:

#	OCCUPANT LOAD
ROOM NAME 101	ROOM TAG
FVC	FIRE VALVE OR HOSE CABINET WITH EXTINGUISHER
FEC	FIRE EXTINGUISHER CABINET
FE	WALL MOUNTED FIRE EXTINGUISHER
A	ACCESSORY SPACE
192'	TRAVEL DISTANCE IN FEET
	2 HR FIRE BARRIER
	2 HR SHAFT WALL
	1 HR FIRE BARRIER
▼	PRIMARY EXIT
PLACEHOLDER	2-HOUR FIRE RATING AT UNDERSIDE OF ROOF DECK & STRUCTURE, AT TOP OF ELEVATOR SHAFTS, ELEVATOR MACHINE ROOM CEILINGS AND WHERE SHAFTS TO NOT EXTEND TO THE BOTTOM OF THE BUILDING.
PLACEHOLDER	1-HOUR FIRE RATING AT UNDERSIDE OF ROOF DECK & STRUCTURE

GENERAL NOTES:

1. PROVIDE 2-A MINIMUM RATING SINGLE EXTINGUISHER THROUGHOUT - PER NFPA-10 c 2007
2. PROVIDE 20-B MINIMUM EXTINGUISHER RATING (ORDINARY HAZARD) PER NFPA-10 c 2007 AT THE FOLLOWING LOCATIONS:
   KITCHEN
   MECHANICAL
   ELEVATOR EQUIPMENT ROOMS
   CAFETERIA/DINING
   CUSTODIAN RECEIVING AND SUPPLY
   CUSTODIAN WORKSTORAGE
1. PROVIDE FIRE RATED DOORS AND GLAZING IN WALLS DENOTED AS 1 AND 2 HOUR FIRE BARRIER ASSEMBLY ON PLANS G0.02 TO G0.05
2. FLOOR ASSEMBLY TO BE 1-HOUR FIRE RATED (UL DESIGN NO. D902)

NORTH ARROW

SCHEMATIC DESIGN

KEYPLAN

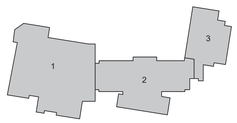

DRAWING NAME:

SECOND FLOOR FIRE SAFETY PLAN

DRAWN BY:	JPT
REVIEWED BY:	JPT
SCALE:	As indicated
JOB NO.:	1605.00
DATE:	DEC. 21, 2017
DRAWING NUMBER:	G0.03

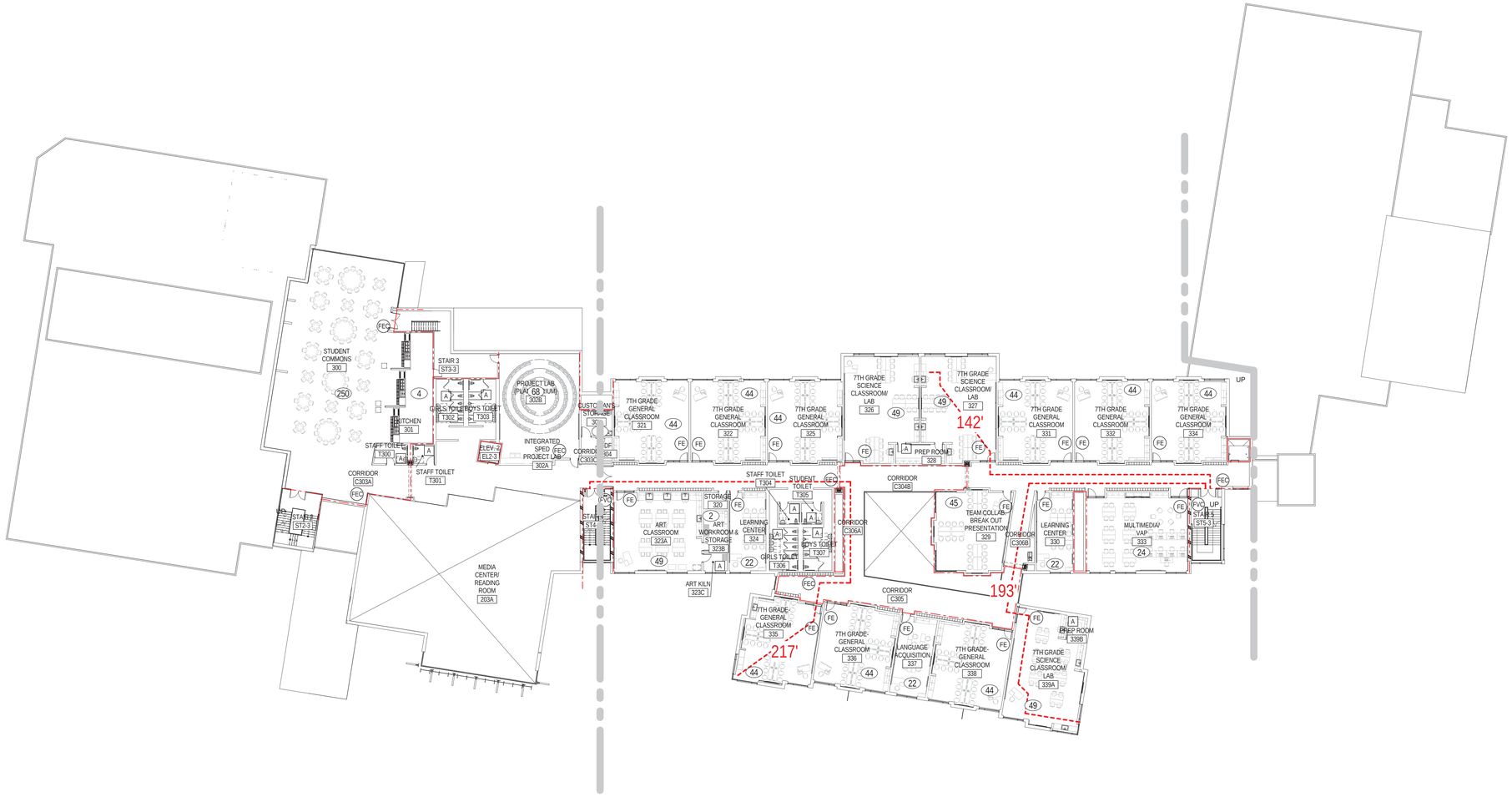

1 THIRD FLOOR - FIRE SAFETY
1" = 20'-0"

THIRD FLOOR FIRE SAFETY ANALYSIS:

TABLE 601 FIRE RESISTANCE RATING REQUIREMENTS FOR BUILDING ELEMENTS

Building Element	Type IIIA
Primary structural frame Including columns, girders, trusses, & braces	1
Bearing walls Exterior Interior	2 1
Exterior Nonbearing walls and partitions	See Table 602
Interior Nonbearing walls and partitions	0
Floor construction and secondary members Including supporting beams & joists	1
Roof construction and secondary members Including supporting beams & joists	1 (b,c)

b. Except in Group F-1, H, M and S-1 Occupancies, fire protection of structural members shall not be required, including protection of roof framing and decking where every part of the roof construction is 20 feet or more above any floor immediately below. Fire-retardant-treated wood members shall be allowed to be used for such unprotected members.

c. In all occupancies, heavy timber shall be allowed where a 1-hour or less fire-resistance rating is required.

Chapter 10: Means of Egress
Section 1002 Definitions
Common Path of Egress Travel: That portion of the exit access travel distance measured from the most remote point within a story to that point where the occupants have separate access to two exits or exit access doorways.
Floor Area, Net: The actual occupied area not including unoccupied accessory areas such as corridors, stairways, ramps, toilet rooms, mechanical rooms and closets.

Means of Egress Sizing
1005.3.1 Stairways: The capacity, in inches, of means of egress stairways shall be calculated by multiplying the occupant load served by such stairways by a means of egress capacity factor of 0.3 inch per occupant. Where stairways serve more than one story, only the occupant load of each story considered individually shall be used in calculating the required capacity of the stairways serving that story.

Exceptions:

1. For other than Group H and I-2 Occupancies, the capacity, in inches, of means of egress stairways shall be calculated by multiplying the occupant load served by such stairways by a means of egress capacity factor of 0.2 inch per occupant in buildings equipped throughout with an automatic sprinkler system installed in accordance with Section 903.3.1.1 or 903.3.1.2 and an emergency voice/alarm communication system in accordance with Section 907.5.2.2.

Total width Means of Egress in inches provided:
Stair 2 = 62 Inches
Stair 3 = 42 Inches
Stair 4 = 60 Inches
Stair 5 = 60 Inches

Total Design Egress Width = 224 Inches

Third Floor Occupants = 1,052 occupants
Required Egress Width
1,052 Occupants x 0.2 inches per occupant = 211 Inches
Design Egress Width = 224 Inches

ai3 architects
526 Boston Post Rd Wayland, MA
508.358.0790 www.ai3architects.com

Copyright © 2017 - Ai3 Architects, LLC

KENNEDY MIDDLE SCHOOL
165 MILL STREET
NATICK, MA 01760

KEYNOTE LEGEND:

FIRE SAFETY PLAN LEGEND:

#	OCCUPANT LOAD
ROOM NAME 101	ROOM TAG
FVC	FIRE VALVE OR HOSE CABINET WITH EXTINGUISHER
FEC	FIRE EXTINGUISHER CABINET
FE	WALL MOUNTED FIRE EXTINGUISHER
A	ACCESSORY SPACE
192	TRAVEL DISTANCE IN FEET
	2 HR FIRE BARRIER
	2 HR SHAFT WALL
	1 HR FIRE BARRIER
	PRIMARY EXIT
PLACEHOLDER	2-HOUR FIRE RATING AT UNDERSIDE OF ROOF DECK & STRUCTURE, AT TOP OF ELEVATOR SHAFTS, ELEVATOR MACHINE ROOM CEILINGS AND WHERE SHAFTS TO NOT EXTEND TO THE BOTTOM OF THE BUILDING.
PLACEHOLDER	1-HOUR FIRE RATING AT UNDERSIDE OF ROOF DECK & STRUCTURE

GENERAL NOTES:

1. PROVIDE 2-A MINIMUM RATING SINGLE EXTINGUISHER THROUGHOUT - PER NFPA-10 c 2007
2. PROVIDE 20-B MINIMUM EXTINGUISHER RATING (ORDINARY HAZARD) PER NFPA-10 c 2007 AT THE FOLLOWING LOCATIONS:
   - KITCHEN
   - MECHANICAL
   - ELEVATOR EQUIPMENT ROOMS
   - CAFETERIA/DINING
   - CUSTODIAN RECEIVING AND SUPPLY
   - CUSTODIAN WORK/STORAGE
1. PROVISE FIRE RATED DOORS AND GLAZING IN WALLS DENOTED AS 1 AND 2 HOUR FIRE BARRIER ASSEMBLY ON PLANS G0.02 TO G0.05
2. FLOOR ASSEMBLY TO BE 1-HOUR FIRE RATED (UL DESIGN NO. D902)

NORTH ARROW

SCHEMATIC DESIGN

KEYPLAN

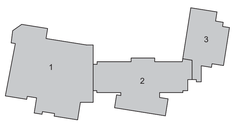

DRAWING NAME:

THIRD FLOOR FIRE SAFETY PLAN

DRAWN BY: JPT
REVIEWED BY: JPT
SCALE: As indicated
JOB NO.: 1605.00
DATE: DEC. 21, 2017
DRAWING NUMBER: G0.04

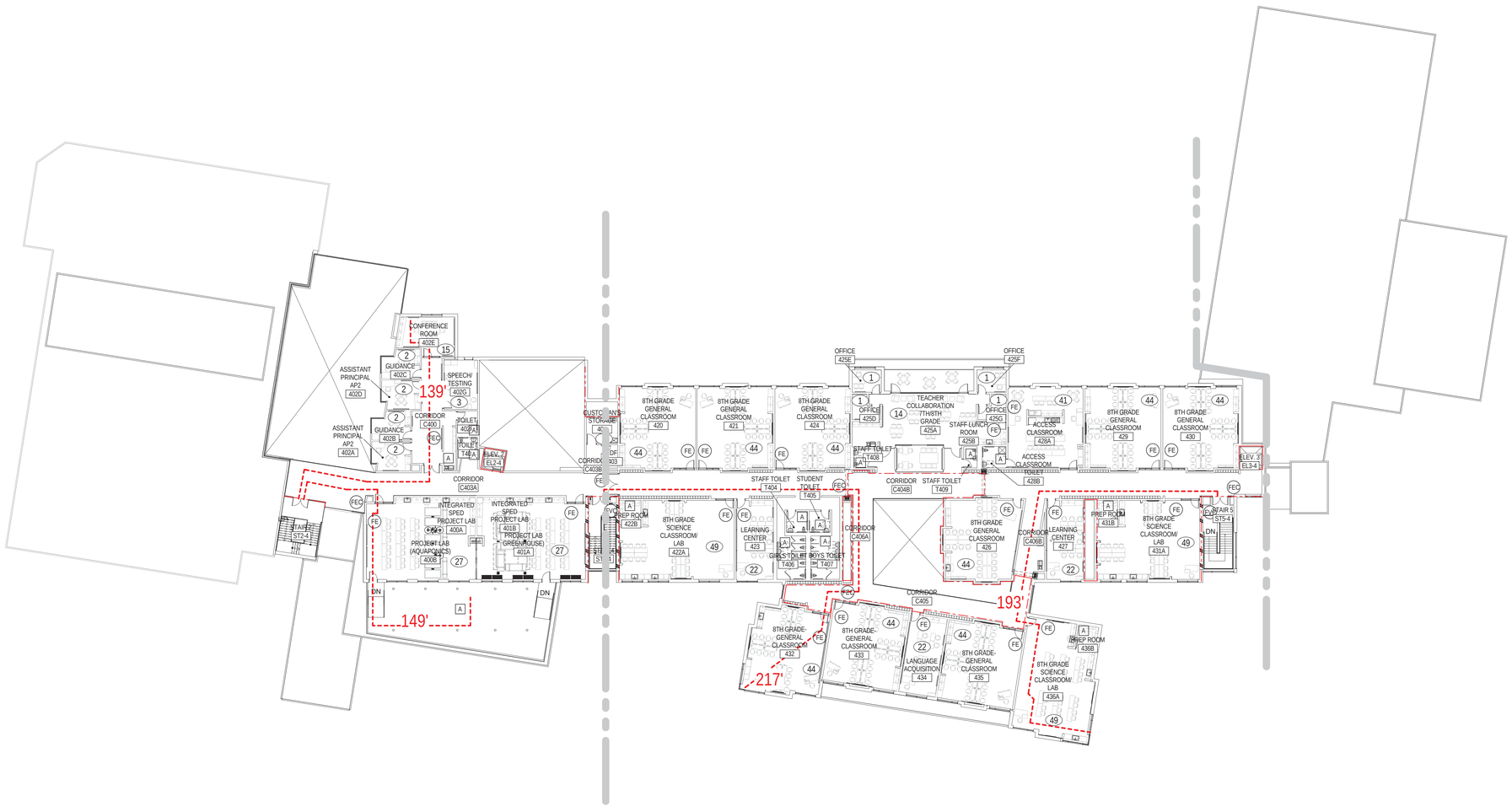

1 FOURTH FLOOR - FIRE SAFETY
1" = 20'-0"

FOURTH FLOOR FIRE SAFETY ANALYSIS:

TABLE 601 FIRE RESISTANCE RATING REQUIREMENTS FOR BUILDING ELEMENTS

Building Element	Type IIIA
Primary structural frame Including columns, girders, trusses, & braces	1
Bearing walls Exterior Interior	2 1
Exterior Nonbearing walls and partitions	See Table 602
Interior Nonbearing walls and partitions	0
Floor construction and secondary members Including supporting beams & joists	1
Roof construction and secondary members Including supporting beams & joists	1 (b,c)

b. Except in Group F-1, H, M and S-1 Occupancies, fire protection of structural members shall not be required, including protection of roof framing and decking where every part of the roof construction is 20 feet or more above any floor immediately below. Fire-retardant-treated wood members shall be allowed to be used for such unprotected members.

c. In all occupancies, heavy timber shall be allowed where a 1-hour or less fire-resistance rating is required.

Chapter 10: Means of Egress
Section 1002 Definitions
Common Path of Egress Travel: That portion of the exit access travel distance measured from the most remote point within a story to that point where the occupants have separate access to two exits or exit access doorways.
Floor Area, Net: The actual occupied area not including unoccupied accessory areas such as corridors, stairways, ramps, toilet rooms, mechanical rooms and closets.

Means of Egress Sizing
1005.3.1 Stairways: The capacity, in inches, of means of egress stairways shall be calculated by multiplying the occupant load served by such stairways by a means of egress capacity factor of 0.3 inch per occupant. Where stairways serve more than one story, only the occupant load of each story considered individually shall be used in calculating the required capacity of the stairways serving that story.

Exceptions:
1. For other than Group H and I-2 Occupancies, the capacity, in inches, of means of egress stairways shall be calculated by multiplying the occupant load served by such stairways by a means of egress capacity factor of 0.2 inch per occupant in buildings equipped throughout with an automatic sprinkler system installed in accordance with Section 903.3.1.1 or 903.3.1.2 and an emergency voice/alarm communication system in accordance with Section 907.5.2.2.

Total width Means of Egress in inches provided:
Stair 2 = 62 Inches
Stair 4 = 60 Inches
Stair 5 = 60 Inches

Total Design Egress Width = 182 Inches

Fourth Floor Occupants = 749 occupants
Required Egress Width
749 Occupants x 0.2 inches per occupant = 150 Inches
Design Egress Width = 182 Inches

architects
526 Boston Post Rd Wayland, MA
508.358.0790 www.ai3architects.com

Copyright © 2017 - AI3 Architects, LLC

KENNEDY MIDDLE SCHOOL
165 MILL STREET
NATICK, MA 01760

KEYNOTE LEGEND:

FIRE SAFETY PLAN LEGEND:

#	OCCUPANT LOAD
ROOM NAME 101	ROOM TAG
FVC	FIRE VALVE OR HOSE CABINET WITH EXTINGUISHER
FEC	FIRE EXTINGUISHER CABINET
FE	WALL MOUNTED FIRE EXTINGUISHER
A	ACCESSORY SPACE
192	TRAVEL DISTANCE IN FEET
	2 HR FIRE BARRIER
	2 HR SHAFT WALL
	1 HR FIRE BARRIER
	PRIMARY EXIT
PLACEHOLDER	2-HOUR FIRE RATING AT UNDERSIDE OF ROOF DECK & STRUCTURE, AT TOP OF ELEVATOR SHAFTS, ELEVATOR MACHINE ROOM CEILINGS AND WHERE SHAFTS TO NOT EXTEND TO THE BOTTOM OF THE BUILDING.
PLACEHOLDER	1-HOUR FIRE RATING AT UNDERSIDE OF ROOF DECK & STRUCTURE

GENERAL NOTES:

1. PROVIDE 2-A MINIMUM RATING SINGLE EXTINGUISHER THROUGHOUT - PER NFPA-10 c 2007
2. PROVIDE 20-B MINIMUM EXTINGUISHER RATING (ORDINARY HAZARD) PER NFPA-10 c 2007 AT THE FOLLOWING LOCATIONS:
   - KITCHEN
   - MECHANICAL
   - ELEVATOR EQUIPMENT ROOMS
   - CAFETERIA/DINING
   - CUSTODIAN RECEIVING AND SUPPLY
   - CUSTODIAN WORK/STORAGE
1. PROVIDE FIRE RATED DOORS AND GLAZING IN WALLS DENOTED AS 1 AND 2 HOUR FIRE BARRIER ASSEMBLY ON PLANS G0.02 TO G0.05
2. FLOOR ASSEMBLY TO BE 1-HOUR FIRE RATED (UL DESIGN NO. D902)

NORTH ARROW

SCHEMATIC DESIGN

KEYPLAN

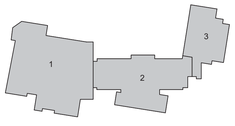

DRAWING NAME:

FOURTH FLOOR FIRE SAFETY PLAN

DRAWN BY:	JPT
REVIEWED BY:	JPT
SCALE:	As indicated
JOB NO.:	1605.00
DATE:	DEC. 21, 2017
DRAWING NUMBER:	G0.05

_ai3 MASTER KEYNOTE LEGEND

03 30 00.01	CONCRETE
04 20 00.01	CMU - STANDARD - NORMAL WEIGHT - REFERENCE DRAWINGS FOR DEPTH SIZE AND FIRE RATING
05 12 00.01	STEEL BEAM - SEE STRUCTURAL
05 12 00.16	STEEL CHANNEL - SEE STRUCTURAL
05 12 00.18	STEEL ANGLE CONTINUOUS - SEE STRUCTURAL
05 12 00.36	STEEL PLATE BENT - SEE STRUCTURAL
05 31 00.01	COMPOSITE STEEL DECK - SEE STRUCTURAL
05 31 00.10	STEEL ROOF DECK - 1 1/2 INCH GALVANIZED - SEE STRUCTURAL
05 31 00.11	STEEL ROOF DECK - 3 INCH GALVANIZED - SEE STRUCTURAL
05 40 00.03	STEEL STUDS - 3 5/8 INCH - 16 INCHES O.C. MAX
05 40 00.19	STEEL Z-CLIP - 16 GAGE MIN. - 1 INCH MIN. DEPTH - 16 INCHES O.C. MAX
05 50 00.10	STEEL ANGLE - SEISMIC CLIP - SEE STRUCTURAL
05 50 00.93	ROOF ACCESS LADDER - INTERIOR
06 10 00.04	WOOD BLOCKING - (2X) CONTINUOUS - PRESSURE TREATED - SIZE AS REQUIRED - ESTABLISH LEVEL INSTALLATION SURFACE FOR ROOFTOP CURB
06 10 00.21	WOOD BLOCKING - 2X FIRE RETARDANT TREATED - SIZE AS NOTED OR DRAWN
06 10 00.33	PLYWOOD - 5/8 INCH
06 10 00.42	PLYWOOD PRESSURE TREATED - 1/2 INCH
06 20 00.62	HARDBOARD STAGE FLOORING
07 21 00.20	GLASS FIBER INSULATION
07 21 00.21	GLASS FIBER ACOUSTICAL BLANKET INSULATION - 6 INCH - UNFACED
07 21 00.22	GLASS FIBER ACOUSTICAL BLANKET INSULATION - 3 1/2 INCH - UNFACED
07 21 00.30	MINERAL FIBER INSULATION
07 21 00.31	MINERAL FIBER ACOUSTICAL INSULATION - 6 INCH
07 21 00.32	MINERAL FIBER ACOUSTICAL INSULATION - 3 1/2 INCH
07 21 00.40	FOAMED IN PLACE INSULATION / AIR BARRIER
07 54 19.04	POLYISO TAPERED INSULATION
07 54 19.05	FLASHING MEMBRANE
07 54 19.12	BLIND NAILER
07 54 19.14	STAINLESS STEEL HOSE CLAMP
07 54 19.20	PVC EXPANSION JOINT
07 54 19.90	ADHESIVE
07 54 19.91	SEALANT - CONTINUOUS
07 54 19.92	HOT-AIR WELD
07 62 00.40	SHEET METAL COLLAR
07 62 00.41	SHEET METAL RAIN HOOD
07 71 00.01	FACTORY FABRICATED FASCIA TRIM/ROOF EDGE - CUSTOM COLOR
07 72 00.02	ROOF SCUTTLE - TYPE 2 - 3'-0" x 4'-6"
07 72 00.10	NEOPRENE GASKET ENTIRE PERIMETER TYP.
07 72 00.12	SPRING LATCH W/ HANDLE AND PADLOCK HASP ON INSIDE
07 72 00.13	PADLOCK HASP
07 72 00.40	WELDED ALUMINUM CURB
07 72 00.60	HEAT AND SMOKE VENT - 5'-0" x 10'-0"
07 81 00.01	CEMENTITIOUS FIREPROOFING
07 84 00.01	FIRE SAFING MINERAL WOOL
07 84 00.02	CAULK - CAULK AND PUTTY
07 92 00.01	JOINT SEALANT - TYPE AS REQUIRED
07 92 00.02	BACKER ROD AND SEALANT - TYPE AS REQUIRED
08 11 13.11	STEEL FRAME - SEE SCHEDULE FOR TYPES
08 11 13.20	STEEL FRAME CLIP BY FRAME INSTALLER
08 14 16.01	SOLID CORE FLUSH WOOD DOOR- SEE DOOR SCHEDULE
08 49 13.02	ALUMINUM ENTRANCE DOOR
08 71 00.11	ALUMINUM THRESHOLD
09 21 23.11	METAL SHAFTWALL C-H STUD - 2 1/2 INCH - 24 INCHES O.C. MAX
09 21 23.21	GYPSUM SHAFTWALL LINER PANEL - 1 INCH
09 21 23.32	GYPSUM BOARD - 5/8 INCH TYPE "X" - 2 LAYERS
09 21 23.41	METAL SHAFTWALL C-STUD TRACK - 2 INCH
09 21 23.42	METAL SHAFTWALL H STUD - 2 INCH
09 21 23.51	ALUMINUM 2x2x2-1/2 INCH BREAKAWAY CLIP - MAX 10 FEET O.C. VERTICALLY
09 22 16.01	METAL STUD 1-5/8 INCH - 16 INCHES O.C. MAX
09 22 16.03	METAL STUD 3-5/8 INCH - 16 INCHES O.C. MAX
09 22 16.06	METAL STUD 6 INCH - 16 INCHES O.C. MAX
09 22 16.08	METAL STUD 8 INCH - 16 INCHES O.C. MAX
09 22 16.20	METAL STUD - REFER TO FLOOR PLANS FOR DEPTH
09 22 16.21	METAL FURRING CHANNEL - 7/8 INCH - 16 INCHES O.C. MAX
09 22 16.31	BOXED HEADER
09 22 16.41	METAL DEFLECTION TRACK ASSEMBLY
09 22 16.42	METAL DEFLECTION TRACK ASSEMBLY - FIRE RATED
09 22 16.52	DOUBLE STUD JAMB - SIZE AS REQUIRED
09 22 16.99	METAL CLIP FOR WALL FRAMING - 16 GA. - 24 INCHES O.C. MAX
09 29 00.01	5/8 INCH GYPSUM BOARD - LEVEL 4 FINISH
09 29 00.02	5/8 INCH GYPSUM BOARD - 2 LAYERS - LEVEL 4 FINISH
09 29 00.43	CORNER BEAD
09 29 00.99	GYPSUM BOARD SYSTEM - LEVEL 4 FINISH - REFER TO FLOOR PLANS AND WALL TYPES FOR COMPONENTS
09 30 13.01	CERAMIC MOSAIC FLOOR TILE
09 30 13.11	GLAZED CERAMIC WALL TILE
09 30 13.31	MARBLE THRESHOLD
09 30 13.43	THICK SET TILE SETTING BED
09 30 13.51	CEMENTITIOUS BACKING BOARD
09 30 13.61	ALUMINUM CORNER TRIM
09 30 16.01	QUARRY TILE
09 30 19.01	PORCELAIN FLOOR TILE
09 30 19.51	CEMENTITIOUS BACKING BOARD
09 30 19.63	ALUMINUM FLOOR TRANSITION STRIP
09 64 29.01	WOOD STRIP AND PLANK FLOOR
09 64 66.01	WOOD ATHLETIC FLOOR
09 65 13.01	RUBBER BASE - 4"
09 65 23.11	TRANSITION STRIP
09 65 43.01	LINOLEUM SHEET FLOORING
09 65 43.11	TRANSITION STRIP
09 68 00.01	CARPET
09 68 00.11	RUBBER CARPET REDUCING STRIP
09 91 00.01	PAINT - SEE SCHEDULE
12 48 13.01	RECESSED ENTRANCE MAT - REFERENCE DRAWINGS FOR SIZE
12 48 13.05	EXTRUDED ALUMINUM RECESSED FRAMING - Z SHAPE
12 48 13.10	EXTRUDED ALUMINUM RECESSED FRAMING - L SHAPE
22 00 00.20	ROOF DRAIN ASSEMBLY - SEE PLUMBING
22 00 00.21	FLOOR DRAIN - SEE PLUMBING
22 00 00.22	DRAIN PIPE - SEE PLUMBING
23 00 00.06	ROOF TOP UNIT - SEE HVAC
23 00 00.23	DUCT - SEE HVAC

architects

526 Boston Post Rd Wayland, MA
508.358.0790 www.ai3architects.com

Copyright © 2017 - Ai3 Architects, LLC

KENNEDY MIDDLE SCHOOL
165 MILL STREET
NATICK, MA 01760

KEYNOTE LEGEND:

GENERAL NOTES:
1. SAMPLE TEXT

NORTH ARROW

SCHEMATIC DESIGN

KEYPLAN

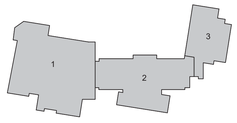

DRAWING NAME:

MASTER KEYNOTE LIST

DRAWN BY: JPT
REVIEWED BY: JPT
SCALE:
JOB NO.: 1605.00
DATE: DEC. 21, 2017
DRAWING NUMBER: A1.01

SYMBOLS & GRAPHIC CONVENTIONS

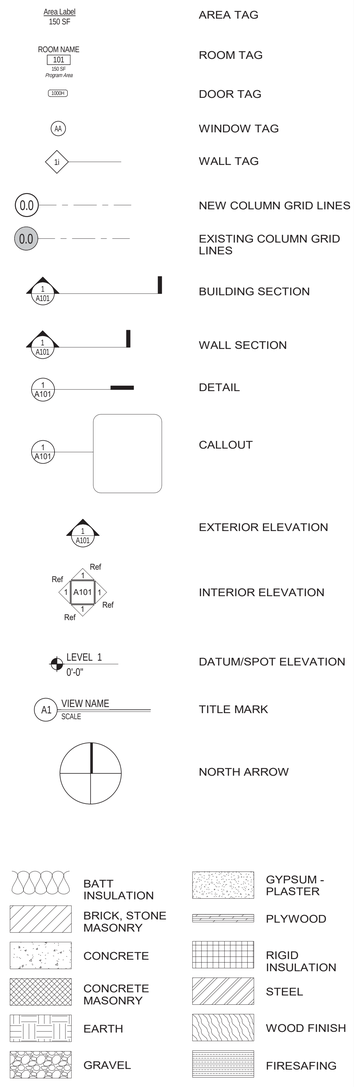

AREA TAG
ROOM TAG
DOOR TAG
WINDOW TAG
WALL TAG
NEW COLUMN GRID LINES
EXISTING COLUMN GRID LINES
BUILDING SECTION
WALL SECTION
DETAIL
CALLOUT
EXTERIOR ELEVATION
INTERIOR ELEVATION
DATUM/SPOT ELEVATION
TITLE MARK
NORTH ARROW

ARCHITECTURAL ABBREVIATION LIST

A	ACRE
AC	AIR CONDITIONING
ACST	ACOUSTICAL
ACT	ACOUSTICAL CEILING TILE
AD	AREA DRAIN
ADD	ADDENDUM
ADDL	ADDITIONAL
ADJ	ADJUSTABLE, ADJACENT
AFF	ABOVE FINISH FLOOR
AGGR	AGGREGATE
AHU	AIR HANDLING UNIT
ALT	ALTERNATE
ALUM	ALUMINUM
ANOD	ANODIZED
AP	ACCESS PANEL
APRX	APPROXIMATE
ARCH	ARCHITECTURAL
AVG	AVERAGE
&	AND
<	ANGLE
@	AT
BC	BRICK COURSE
BD	BOARD
BG	BELOW GRADE
BL	BUILDING LINE
BLDG	BUILDING
BLK	BLACK
BLKG	BLOCKING
BLR	BOILER
BM	BEAM, BENCHMARK
BTM	BOTTOM
BTU	BRITISH THERMAL UNIT
BOW	BOTTOM OF WALL
CAB	CABINET
CB	CHALK BOARD
CBN	CATCH BASIN
CJ	CONTROL JOINT
CL	CENTERLINE
CLG	CEILING
CLKG	CAULKING
CLOS	CLOSET
CLR	CLEAR
CLSRM	CLASSROOM
CMT	CERAMIC MOSAIC TILE
CMTB	CERAMIC MOSAIC TILE BASE
CMU	CONCRETE MASONRY UNIT
COL	COLUMN
COMP	COMPRESSIBLE
CONC	CONCRETE
CONST	CONSTRUCTION
CONT	CONTINUOUS
CONTR	CONTRACTOR
CORR	CORRIDOR
CPT	CARPET
CRS	COURSE
CT	CERAMIC TILE
CTB	CERAMIC TILE BASE
CTR	CENTER
CUH	CABINET UNIT HEATER
CW	COLD WATER
[	CHANNEL
D	DEEP
DBL	DOUBLE
DEG	DEGREE
DEMO	DEMOLITION
DEPT	DEPARTMENT
DET	DETAIL
DF	DRINKING FOUNTAIN
DIA	DIAMETER
DIFF	DIFFUSER
DIM	DIMENSION
DISP	DISPENSER
DIV	DIVISION
DN	DOWN
DPFG	DAMPROOFING
DR	DOOR
DRW	DRAWER
DS	DOWNSPOUT
DWG	DRAWING
E	EAST
EA	EACH
EJ	EXPANSION JOINT
EL	ELEVATION
ELEC	ELECTRICAL
ELEV	ELEVATOR
EMER	EMERGENCY
ENCL	ENCLOSURE
ENTR	ENTRANCE
EP	ELECTRICAL PANEL, EPOXY PAINT
EQ	EQUAL
EQUIP	EQUIPMENT
EWC	ELECTRIC WATER COOLER
EX	EXISTING
EXCV	EXCAVATION
EXP	EXPOSED
EXT	EXTERIOR
EXTR	EXTRUDED
FA	FIRE ALARM
FAB	FABRICATE
FAF	FLUID-APPLIED ATHLETIC FLOORING
FB	FLAT BAR
FD	FLOOR DRAIN
FDVC	FIRE DEPARTMENT VALVE CABINET
FE	FIRE EXTINGUISHER
FEC	FIRE EXTINGUISHER CABINET
FEJ	FLOOR EXPANSION JOINT
FF	FINISH FLOOR
FH	FIRE HYDRANT
FIN	FINISH
FIN GR	FINISH GRADE
FIX	FIXED
FIXT	FIXTURE
FLASH	FLASHING
FLEX	FLEXIBLE
FLUOR	FLUORESCENT
FLR	FLOOR
FND	FOUNDATION
FPRF	FIRE PROOFING
FRT	FIRE RETARDANT TREATED
FS	FOOD SERVICE
FT	FOOT, FEET
FTG	FOOTING
FTR	FINNED TUBE RADIATION
FURN	FURNITURE
FURR	FURRING
FUT	FUTURE
GA	GUAGE
GALV	GALVANIZED
GC	GENERAL CONTRACTOR
GEN	GENERAL, GENERATOR
GFRG	GLASS FIBER REINFORCED GYPSUM
GFRP	GLASS FIBER REINFORCED PLASTER
GL	GLASS
GND	GROUND
GWB	GYPSUM WALL BOARD
GYP	GYPSUM
H	HIGH
HC	HOLLOW CORE
HDW	HARDWARE
HM	HOLLOW METAL
HORZ	HORIZONTAL
HP	HIGH POINT
HR	HOUR
HSMB	HORIZONTAL SLIDING MARKER BOARD
HT	HEIGHT
HVAC	HEATING VENTILATION & AIR CONDITIONING
HW	HOT WATER
HWD	HARDWOOD
ID	INSIDE DIAMETER
IN	INCH, INCHES
INCL	INCLUDE, INCLUSIVE
INSUL	INSULATION, INSULATED
INT	INTERIOR
INV	INVERT, INVERSE
JAN	JANITOR
JT	JOINT
KD	KNOCKED DOWN
KEC	KITCHEN EQUIPMENT CONTRACTOR
KIT	KITCHEN
KW	KILOWATT
KWH	KILOWATT PER HOUR
L	LEFT, LONG
LAM	LAMINATE, LAMINATED
LAV	LAVATORY
LB	POUND
LF	LINEAR FOOT, LINEAR FEET
LH	LEFT HAND
LP	LOW POINT
LT	LIGHT
LTG	LIGHTING
MAT	ENTRANCE MATS, ENTRANCE GRATE
MATL	MATERIAL
MAX	MAXIMUM
MB	MARKER BOARD
MECH	MECHANICAL
MEMB	MEMBRANE
MFR	MANUFACTURER
MIN	MINIMUM
MISC	MISCELLANEOUS
MO	MASONRY OPENING
MR	MOISTURE RESISTANCE
MTD	MOUNTED
MTG	MOUNTING, MEETING
MTL	METAL
MUL	MULLION
N	NORTH
NAT	NATURAL
NIC	NOT IN CONTRACT
NO	NUMBER
NOM	NOMINAL
NRC	NOISE REDUCTION COEFFICIENT
NTS	NOT TO SCALE
OA	OVERALL
OC	ON CENTER
OD	OUTSIDE DIAMETER
OFOI	OWNER FURNISHED / OWNER INSTALLED
OFCI	OWNER FURNISHED / CONTRACTOR INSTALLED
OH	OVERHEAD
OPER	OPERABLE
OPNG	OPENING
OPP	OPPOSITE
OZ	OUNCE
P	PAINT
PAR	PARALLEL
PERF	PERFORATED
PERP	PERPENDICULAR
PG	PAINT GRADE
PL	PLATE
PLAM	PLASTIC LAMINATE
PLBG	PLUMBING
PLAS	PLASTER
PNL	PANEL, PANELING
POL	POLISHED
PR	PAIR
PRFB	PREFABRICATED
PRTBD	PARTICLE BOARD
PSI	POUNDS PER SQUARE INCH
PT	PRESSURE TREATED
PTD	PAINTED
PTN	PARTITION
PWD	PLYWOOD
QR	QUARTER ROUND
QT	QUARRY TILE
QUAL	QUALITY
QUAN	QUANTITY
R	RADIUS, RISER, RUBBER
RB	RUBBER BASE
RCPT	RECEPTACLE
RD	ROOF DRAIN
REC	RECESSED
RECT	RECTANGULAR
REF	REFERENCE
REFL	REFLECTED
REFR	REFRIGERATOR
REINF	REINFORCED
REQD	REQUIRED
RESIL	RESILIENT
REV	REVISE, REVERSE
RH	RIGHT HAND
RHR	RIGHT HAND REVERSE
RL	RAIN LEADER
RLG	RAILING
RO	ROUGH OPENING
RR	RUBBER RISER
RT	RIGHT
RTR	RUBBER TILE, RUBBER TREAD
S	SOUTH
SC	SOLID CORE
SCHD	SCHEDULE
SCRF	STATIC-CONTROL RESILIENT FLOORING
SECT	SECTION
SEG	SEGMENT
SF	SQUARE FOOT
SH	SHELF
SHT	SHEET
SHR	SHOWER
SHVT	SEAMLESS SHEET VINYL
SIM	SIMILAR
SLH	SLOTTED HORIZONTAL
SLV	SLOTTED VERTICAL
SMFL	SEAMLESS FLOORING
SPEC	SPECIFICATION
SQ	SQUARE
SQIN	SQUARE INCH
SS	STAINLESS STEEL
SSM	SOLID SURFACE MATERIAL
ST	STREET
STA	STATION
STC	SOUND TRANSMISSION CLASSIFICATION
STD	STANDARD
STL	STEEL
STOR	STORAGE
STR	STRUCTURE
STRL	STRUCTURAL
SUB	SUBCONTRACTOR
SUSP	SUSPENDED
SWD	SOFT WOOD
SYM	SYMMETRICAL
SYN	SYNTHETIC
SYST	SYSTEM
T	TREAD
T&G	TONGUE & GROOVE
TB	TACK BOARD
TC	TOP OF CURB
TEL	TELEPHONE
TEMP	TEMPORARY, TEMPERATURE
TFE	THIN-FILM EPOXY FLOORING
THK	THICK
THR	THRESHOLD
TLT	TOILET
TO	TOP OF
TOP	TOP OF BLOCKING
TOC	TOP OF CONCRETE
TOF	TOP OF FOUNDATION
TOS	TOP OF STEEL
TRK	TRACK
TS	TUBE STEEL
TV	TELEVISION
TW	TOP OF WALL
TYP	TYPICAL
TZ	TERRAZZO
UC	UNDERCUT
UL	UNDERWRITERS LABORATORY
UNO	UNLESS OTHERWISE NOTED
UR	URINAL
UV	UNIT VENTILATOR, ULTRAVIOLET
VB	VINYL BASE
VCT	VINYL COMPOSITE TILE
VERT	VERTICAL
VEST	VESTIBULE
VIF	VERIFY IN FIELD
VP	VENEER PLASTER
VTR	VENT THROUGH ROOF
VWC	VINYL WALLCOVERING
W	WEST, WIDE, WIDTH
W/	WITH
W/O	WITHOUT
WAB	WOOD ATHLETIC FLOORING VENTED BASE
WAF	WOOD ATHLETIC FLOORING
WC	WATER CLOSET
WD	WOOD
WEJ	WALL EXPANSION JOINT
WF	WIDE FLANGE
WH	WATER HEATER
WP	WORK POINT
WPFG	WATER PROOFING
WSF	WOOD STRIP FLOORING
WT	WEIGHT, WT (STEEL SHAPE)
XBAR	CROSSBAR
XH	EXTRA HEAVY
XL	EXTRA LARGE
YD	YARD
YR	YEAR
YS	YIELD STRENGTH
Z	MODULUS OF SECTION
ZN	ZINC

architects
526 Boston Post Rd Wayland, MA
508.358.0790 www.ai3architects.com

Copyright © 2017 - AI3 Architects, LLC

KENNEDY MIDDLE SCHOOL
165 MILL STREET
NATICK, MA 01760

KEYNOTE LEGEND:

NORTH ARROW

SCHEMATIC DESIGN

KEYPLAN

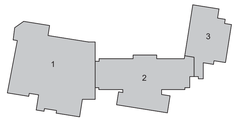

DRAWING NAME:

ABBREVIATIONS, SYMBOLS & MATERIALS INDICATIONS

DRAWN BY:	JPT
REVIEWED BY:	JPT
SCALE:	1/8" = 1'-0"
JOB NO.:	1605.00
DATE:	DEC. 21, 2017
DRAWING NUMBER:	A1.03

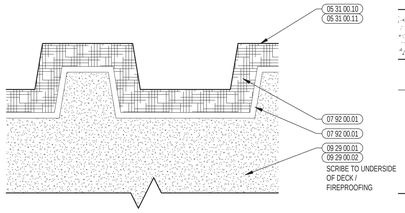

METAL STUD WALL HEAD DETAIL

AT ROOF DECK, TYP

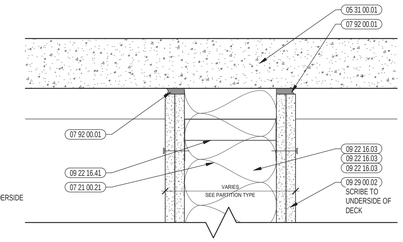

ACOUSTIC WALL HEAD DETAIL, TYP

SIM AT NON-ACOUSTIC

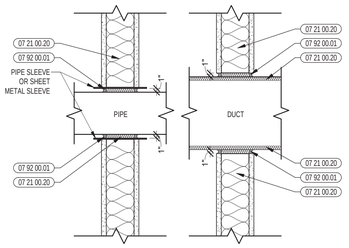

WALL PENETRATION DETAILS

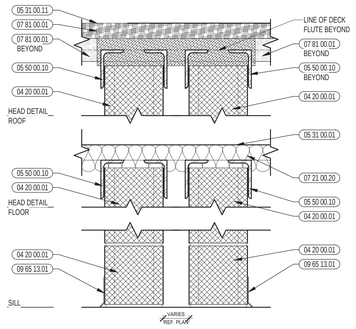

6 8 CMU PLUMBING WALL

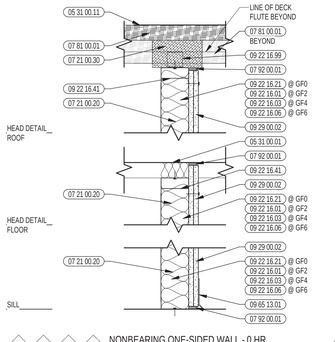

GF0 GF2 GF4 GF6 NONBEARING ONE-SIDED WALL - 0 HR.

AT AUDITORIUM WALL LOCATIONS, STUDS ARE INSTALLED MAXIMUM 12" O.C.

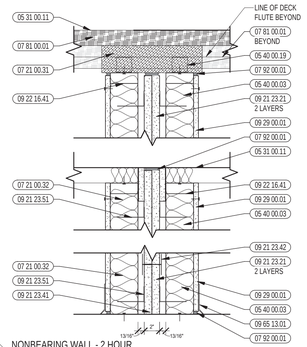

BS NONBEARING WALL - 2 HOUR

UL DESIGN NO. U347

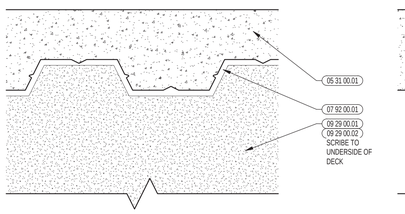

METAL STUD WALL HEAD DETAIL

AT FLOOR SLAB, TYP

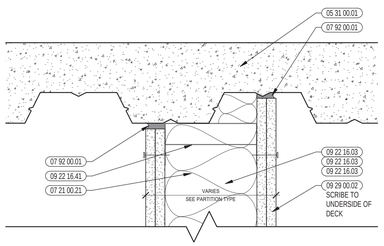

ACOUSTIC WALL HEAD DETAIL, TYP

SIM AT NON-ACOUSTIC

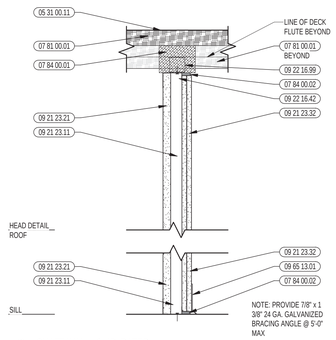

NOTE: PROVIDE 7/8" x 1 3/8" 24 GA. GALVANIZED BRACING ANGLE @ 5'-0" MAX

S1 SHAFT WALL - 2 HR. RATED

UL DESIGN NO. U497

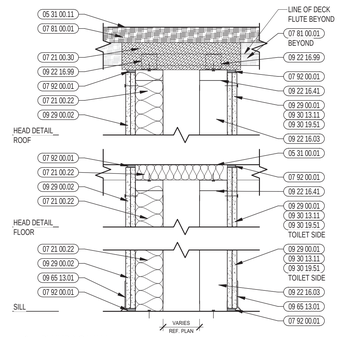

GP PLUMBING WALL

STC 60
- ALL PLUMBING/PIPING CONNECTIONS SHALL BE SECURED EXCLUSIVELY TO THE STUDS ON THE TOILET SIDE OF THE WALL TO PREVENT TRANSMISSION OF STRUCTURE-BORNE NOISE TO ADJACENT SPACES
- EACH ROW OF STUDS TO BE FREESTANDING TO PREVENT TRANSMISSION OF NOISE

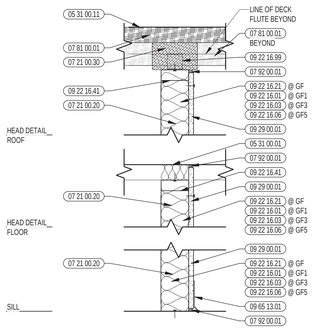

GF GF1 GF3 GF5 NONBEARING ONE-SIDED WALL - 0 HR.

AT AUDITORIUM WALL LOCATIONS, STUDS ARE INSTALLED MAXIMUM 12" O.C.

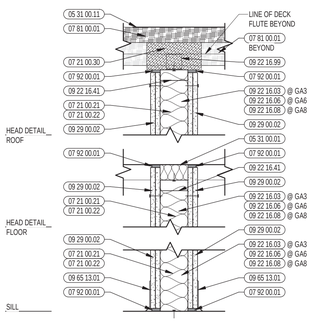

GA3 GA6 GA8 GA10 NONBEARING WALL - ACOUSTICAL

STC 50
NOTE 1: AT AUDITORIUM WALL LOCATIONS, STUDS ARE INSTALLED MAXIMUM 12" O.C.
NOTE 2: AT CLASSROOM CORRIDORS (CORRIDOR SIDE) ABUSE RESISTANCE DRYWALL WILL BE USED FROM ABOVE WALL TILE LOCATION TO 7'-0" ABOVE FF

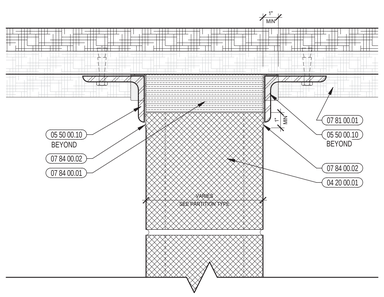

CMU RATED WALL HEAD DETAIL

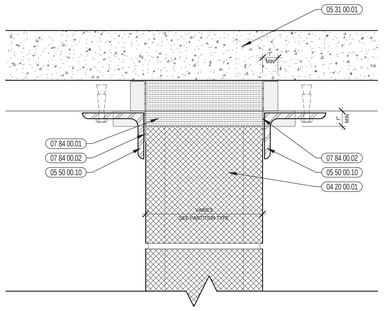

CMU RATED WALL HEAD DETAIL

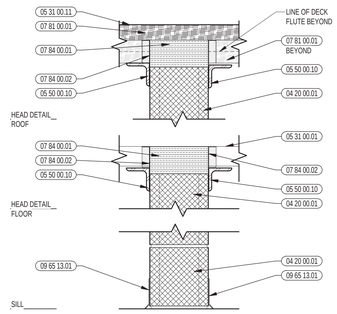

8.2 8" CMU NONBEARING WALL - 2 HR. RATED

UL DESIGN NO. U905

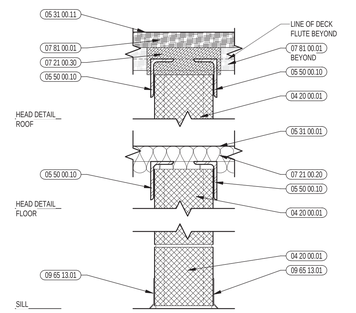

4 6 8 10 12 CMU NONBEARING WALL

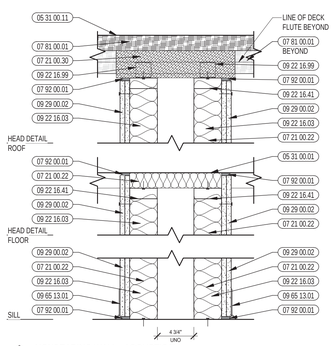

GD NONBEARING WALL - ACOUSTICAL

STC 60
- EACH ROW OF STUDS TO BE FREESTANDING TO PREVENT TRANSMISSION OF NOISE

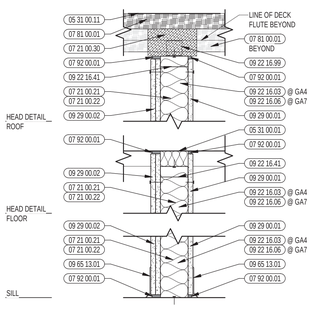

GA4 GA7 NONBEARING WALL - ACOUSTICAL

STC 45

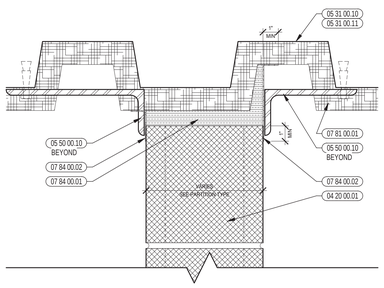

CMU RATED WALL HEAD DETAIL

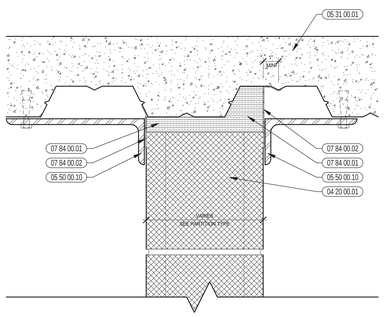

CMU RATED WALL HEAD DETAIL

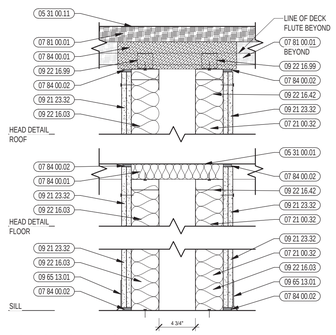

F23 F26 NONBEARING WALL - 2 HR. RATED

UL DESIGN NO. V446

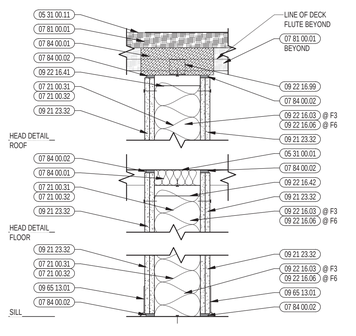

F3 F6 NONBEARING WALL - 2 HR. RATED

UL DESIGN NO. U419
STC 50

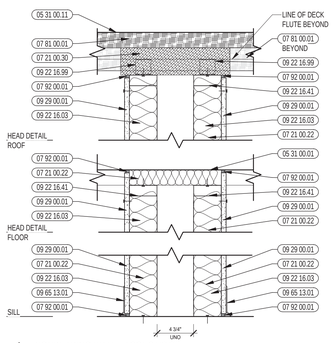

G8 NONBEARING WALL - ACOUSTICAL

STC 53
- EACH ROW OF STUDS TO BE FREESTANDING TO PREVENT TRANSMISSION OF NOISE
NOTE 1: WALLS AT GYMNASIUM WILL BE IMPACT RESISTANT (GYM SIDE) O/YP. WALL BOARD w/ 1/2" PLYWOOD BACKING (09 29 00.09), TO STRUCTURE
NOTE 2: AT CLASSROOM CORRIDORS (CORRIDORS SIDE) ABUSE RESISTANCE DRYWALL WILL BE USED FROM ABOVE THE WALL TILE LOCATION TO 7'-0" ABOVE FF

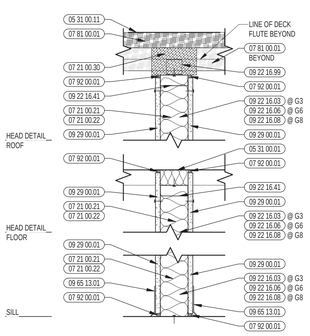

G3 G6 G8 NONBEARING WALL

architects
526 Boston Post Rd Wayland, MA
508.358.0790 www.a3architects.com

Copyright © 2017 - A3 Architects, LLC

KENNEDY MIDDLE SCHOOL
165 MILL STREET
NATICK, MA 01760

KEYNOTE LEGEND:

04 20 00.01	CMU - STANDARD - NORMAL WEIGHT - REFERENCE DRAWINGS FOR DEPTH SIZE AND FIRE RATING
05 31 00.01	COMPOSITE STEEL DECK - SEE STRUCTURAL
05 31 00.10	STEEL ROOF DECK - 1 1/2 INCH GALVANIZED - SEE STRUCTURAL
05 31 00.11	STEEL ROOF DECK - 3 INCH GALVANIZED - SEE STRUCTURAL
05 40 00.03	STEEL STUDS - 3 5/8 INCH - 16 INCHES O.C. MAX
05 40 00.19	STEEL Z-CLIP - 16 GAGE MIN. - 1 INCH MIN. DEPTH - 16 INCHES O.C. MAX
05 50 00.10	STEEL ANGLE - SEISMIC CLIP - SEE STRUCTURAL
07 21 00.20	GLASS FIBER INSULATION
07 21 00.21	GLASS FIBER ACOUSTICAL BLANKET INSULATION - 6 INCH - UNFACED
07 21 00.22	GLASS FIBER ACOUSTICAL BLANKET INSULATION - 3 1/2 INCH - UNFACED
07 21 00.30	MINERAL FIBER INSULATION
07 21 00.31	MINERAL FIBER ACOUSTICAL INSULATION - 6 INCH
07 21 00.32	MINERAL FIBER ACOUSTICAL INSULATION - 3 1/2 INCH
07 81 00.01	CEMENTITIOUS FIREPROOFING
07 84 00.01	FIRE SAFING MINERAL WOOL
07 84 00.02	CAULK - CAULK AND PUTTY
07 92 00.01	JOINT SEALANT - TYPE AS REQUIRED
09 21 23.11	METAL SHAFTWALL C-H STUD - 2 1/2 INCH - 24 INCHES O.C. MAX
09 21 23.21	GYPSUM SHAFTWALL LINER PANEL - 1 INCH
09 21 23.32	GYPSUM BOARD - 5/8 INCH TYPE "X" - 2 LAYERS
09 21 23.41	METAL SHAFTWALL C-STUD TRACK - 2 INCH
09 21 23.42	METAL SHAFTWALL H STUD - 2 INCH
09 21 23.51	ALUMINUM 2x2x2-1/2 INCH BREAKAWAY CLIP - MAX 10 FEET O.C. VERTICALLY
09 22 16.01	METAL STUD 1-5/8 INCH - 16 INCHES O.C. MAX
09 22 16.03	METAL STUD 3-5/8 INCH - 16 INCHES O.C. MAX
09 22 16.06	METAL STUD 6 INCH - 16 INCHES O.C. MAX
09 22 16.08	METAL STUD 8 INCH - 16 INCHES O.C. MAX
09 22 16.21	METAL FURRING CHANNEL - 7/8 INCH - 16 INCHES O.C. MAX
09 22 16.41	METAL DEFLECTION TRACK ASSEMBLY
09 22 16.42	METAL DEFLECTION TRACK ASSEMBLY - FIRE RATED
09 22 16.99	METAL CLIP FOR WALL FRAMING - 16 GA. - 24 INCHES O.C. MAX
09 29 00.01	5/8 INCH GYPSUM BOARD - LEVEL 4 FINISH
09 29 00.02	5/8 INCH GYPSUM BOARD - 2 LAYERS - LEVEL 4 FINISH
09 30 13.11	GLAZED CERAMIC WALL TILE
09 30 19.51	CEMENTITIOUS BACKING BOARD
09 65 13.01	RUBBER BASE - 4"

NORTH ARROW

SCHEMATIC DESIGN

KEYPLAN

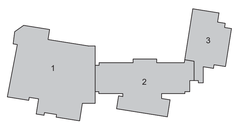

DRAWING NAME:

PARTITION TYPES

DRAWN BY: MJR

REVIEWED BY: JPT

SCALE: As indicated

JOB NO.: 1605.00

DATE: DEC. 21, 2017

DRAWING NUMBER: A1.04

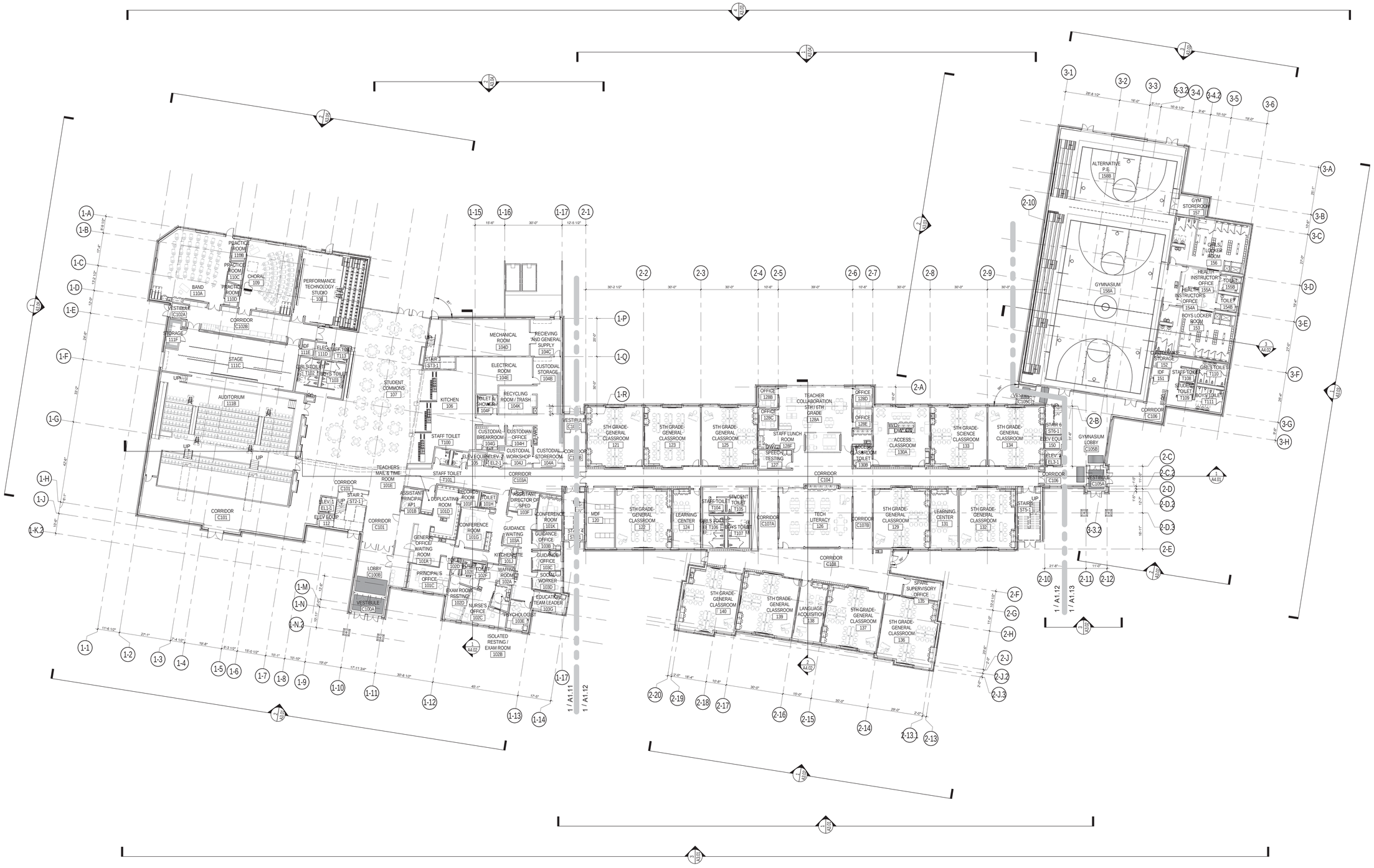

FIRST FLOOR PLAN
GROSS SQUARE FEET = 75,110 SF

1 OVERALL FIRST FLOOR PLAN
1" = 20'-0"

A13 architects
526 Boston Post Rd Wayland, MA
508.358.0790 www.a13architects.com

Copyright © 2017 A13 Architects, LLC

KENNEDY MIDDLE SCHOOL
165 MILL STREET
NATICK, MA 01760

KEYNOTE LEGEND:

GENERAL NOTES:

1. FINISHED FIRST FLOOR ELEVATION 100'-0" ON ARCHITECTURAL DRAWINGS CORRESPONDS WITH ELEVATION 161'-0" ON THE CIVIL PLANS.
2. FIRST FLOOR PLAN ELEVATION 100'-0"

NORTH ARROW

SCHEMATIC DESIGN

KEYPLAN

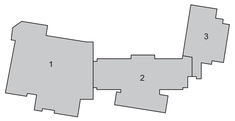

DRAWING NAME:

OVERALL FIRST FLOOR PLAN

DRAWN BY:	MJR/ HM/ SJL
REVIEWED BY:	JPT
SCALE:	As indicated
JOB NO.:	1605.00
DATE:	DEC. 21, 2017
DRAWING NUMBER:	A1.10

1 FIRST FLOOR PLAN - ZONE 1
1/8" = 1'-0"

architects
526 Boston Post Rd Wayland, MA
508.358.0790 www.a3architects.com

Copyright © 2017 A3 Architects, LLC

KENNEDY MIDDLE SCHOOL
165 MILL STREET
NATICK, MA 01760

KEYNOTE LEGEND:

GENERAL NOTES:

1. FINISHED FIRST FLOOR ELEVATION 100'-0" ON ARCHITECTURAL DRAWINGS CORRESPONDS WITH ELEVATION 161'-0" ON THE CIVIL PLANS.
2. FIRST FLOOR PLAN ELEVATION 100'-0"

NORTH ARROW

SCHEMATIC DESIGN

KEYPLAN

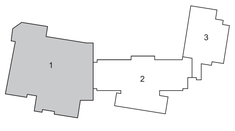

DRAWING NAME:

FIRST FLOOR PLAN
ZONE 1

DRAWN BY:	MJR/ HM/ SJL
REVIEWED BY:	JPT
SCALE:	As indicated
JOB NO.:	1605.00
DATE:	DEC. 21, 2017
DRAWING NUMBER:	A1.11

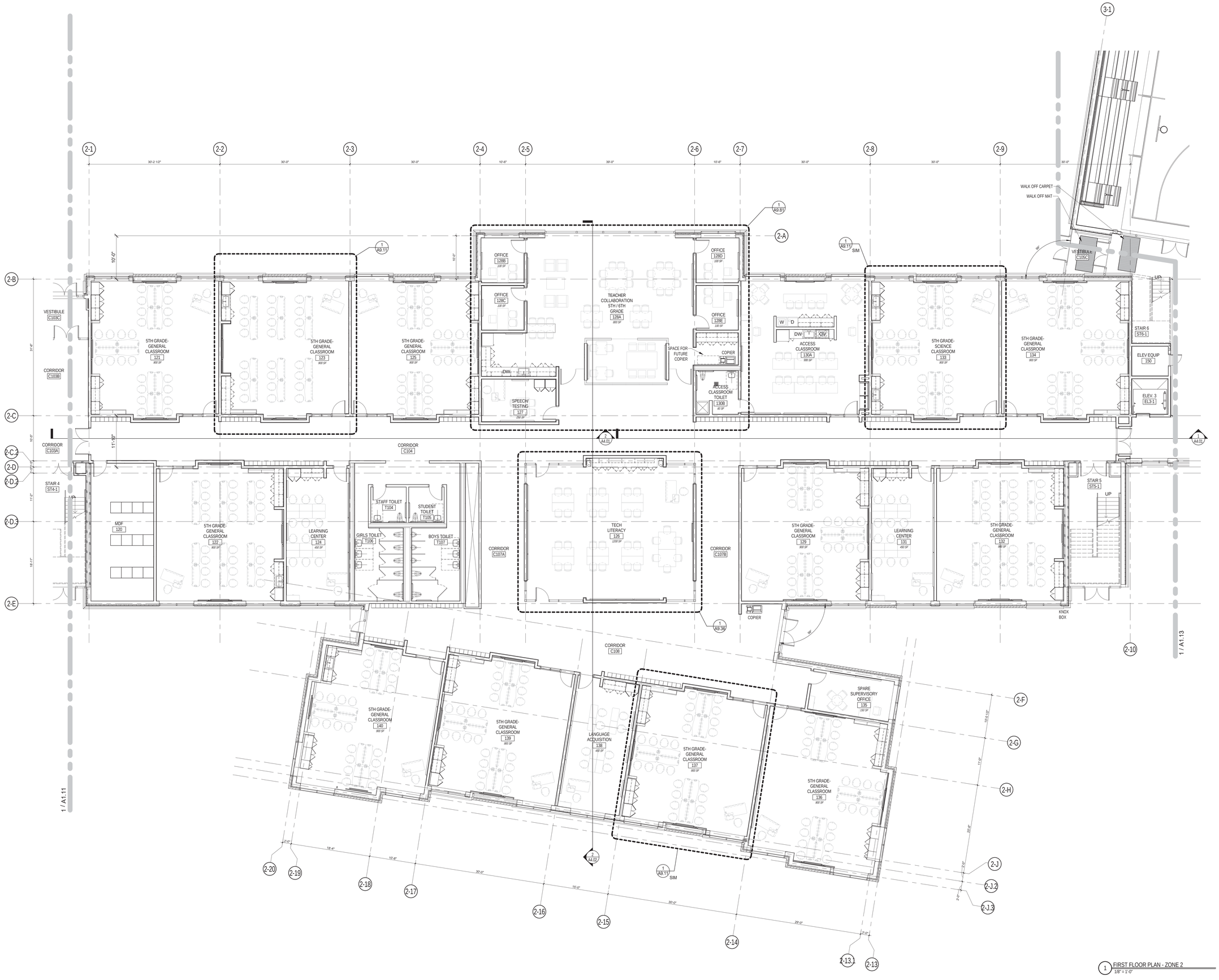

1 FIRST FLOOR PLAN - ZONE 2
1/8" = 1'-0"

A13 architects
526 Boston Post Rd Wayland, MA
508.358.0790 www.a13architects.com

Copyright © 2017 A13 Architects, LLC

KENNEDY MIDDLE SCHOOL
165 MILL STREET
NATICK, MA 01760

KEYNOTE LEGEND:

GENERAL NOTES:

1. FINISHED FIRST FLOOR ELEVATION 100'-0" ON ARCHITECTURAL DRAWINGS CORRESPONDS WITH ELEVATION 181'-0" ON THE CIVIL PLANS.
2. FIRST FLOOR PLAN ELEVATION 100'-0"

NORTH ARROW

SCHEMATIC DESIGN

KEYPLAN

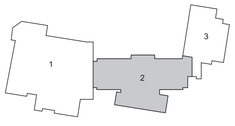

DRAWING NAME:

FIRST FLOOR PLAN
ZONE 2

DRAWN BY:	MJR/ HM/ SJL
REVIEWED BY:	JPT
SCALE:	As indicated
JOB NO.:	1605.00
DATE:	DEC. 21, 2017
DRAWING NUMBER:	A1.12

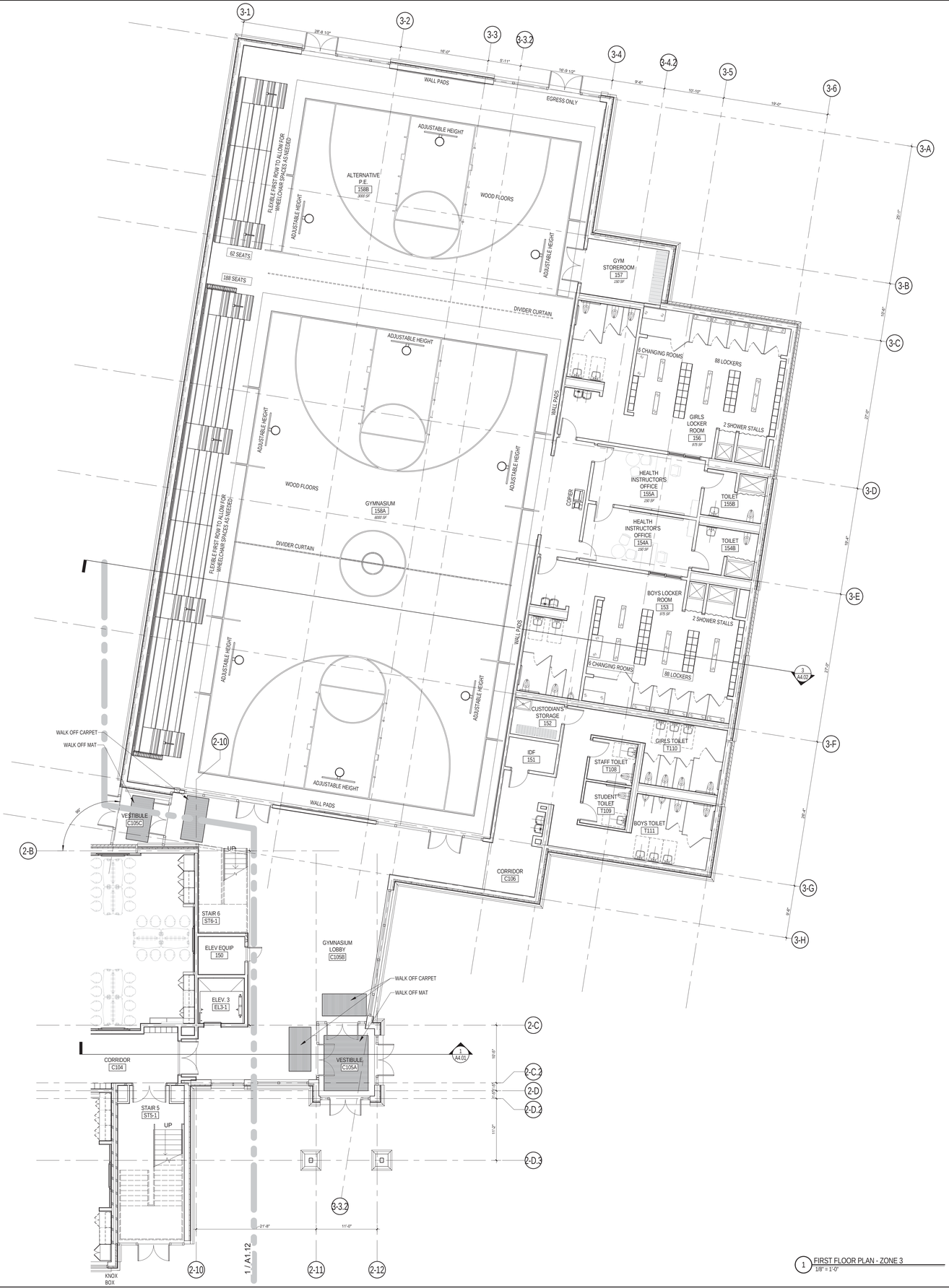

1 FIRST FLOOR PLAN - ZONE 3
1/8" = 1'-0"

architects
526 Boston Post Rd
Wayland, MA
508.358.0790
www.ai3architects.com

Copyright © 2017 - Ai3 Architects, LLC

KENNEDY MIDDLE SCHOOL
165 MILL STREET
NATICK, MA 01760

KEYNOTE LEGEND:

GENERAL NOTES:

1. FINISHED FIRST FLOOR ELEVATION 100'-0" ON ARCHITECTURAL DRAWINGS CORRESPONDS WITH ELEVATION 161'-0" ON THE CIVIL PLANS.
2. FIRST FLOOR PLAN ELEVATION 100'-0"

NORTH ARROW

SCHEMATIC DESIGN

KEYPLAN

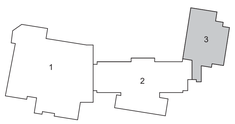

DRAWING NAME:

FIRST FLOOR PLAN
ZONE 3

DRAWN BY:	MJR/ HM/ SJL
REVIEWED BY:	JPT
SCALE:	As indicated
JOB NO.:	1605.00
DATE:	DEC. 21, 2017
DRAWING NUMBER:	A1.13

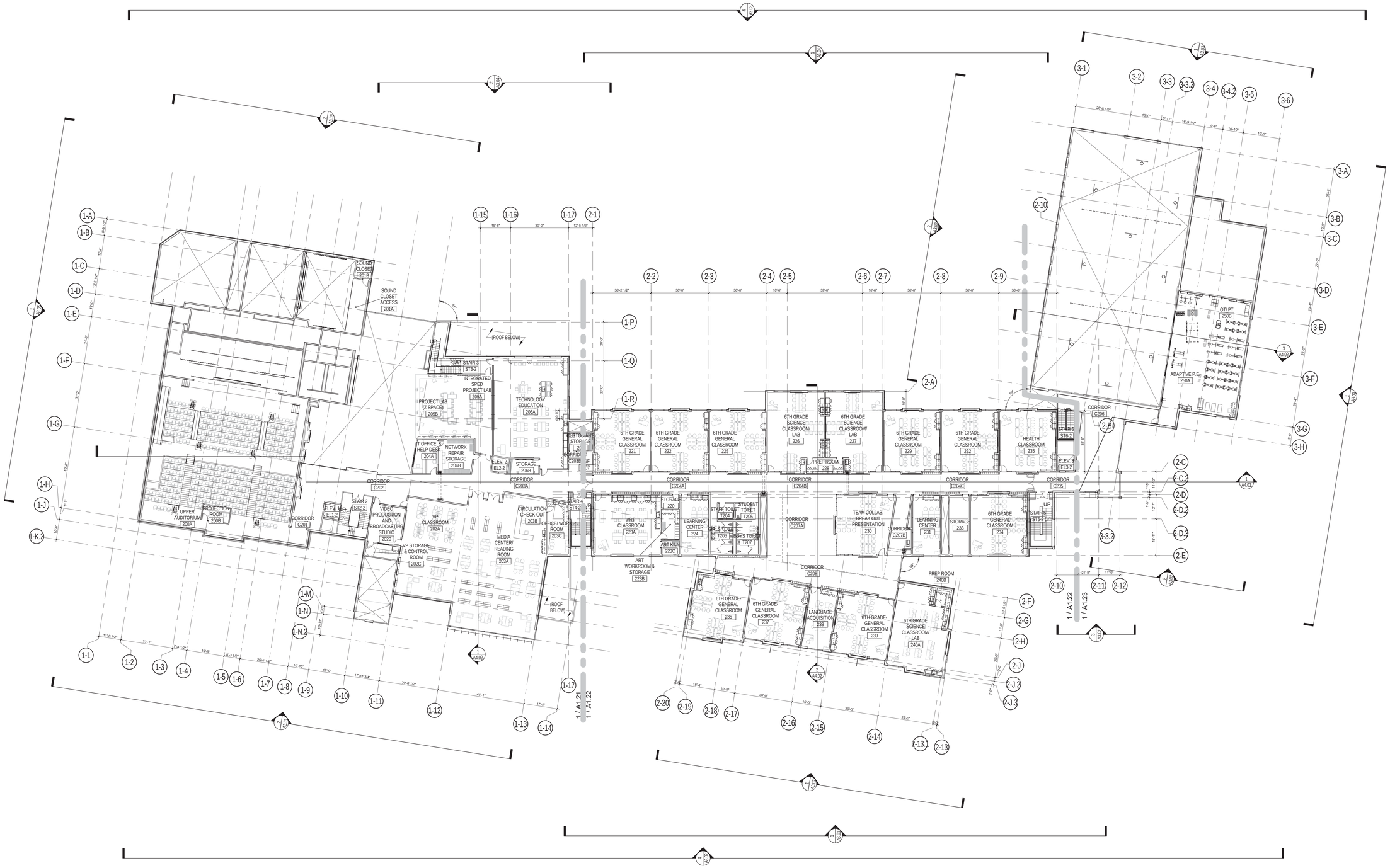

SECOND FLOOR PLAN
GROSS SQUARE FEET = 42,527 SF

1 OVERALL SECOND FLOOR PLAN
1" = 20'-0"

526 Boston Post Rd
508.358.0790
Wayland, MA
www.a3architects.com

Copyright © 2017 - A3 Architects, LLC

KENNEDY MIDDLE SCHOOL
165 MILL STREET
NATICK, MA 01760

KEYNOTE LEGEND:

GENERAL NOTES:

1. FINISHED SECOND FLOOR ELEVATION 100'-0" ON ARCHITECTURAL DRAWINGS CORRESPONDS WITH ELEVATION 161'-0" ON THE CIVIL PLANS.
2. SECOND FLOOR PLAN ELEVATION 114'-0"

NORTH ARROW

SCHEMATIC DESIGN

KEYPLAN

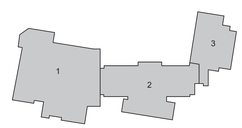

DRAWING NAME:

OVERALL SECOND FLOOR PLAN

DRAWN BY:	MJR/ HM/ SJL
REVIEWED BY:	JPT
SCALE:	As indicated
JOB NO.:	1605.00
DATE:	DEC. 21, 2017
DRAWING NUMBER:	A1.20

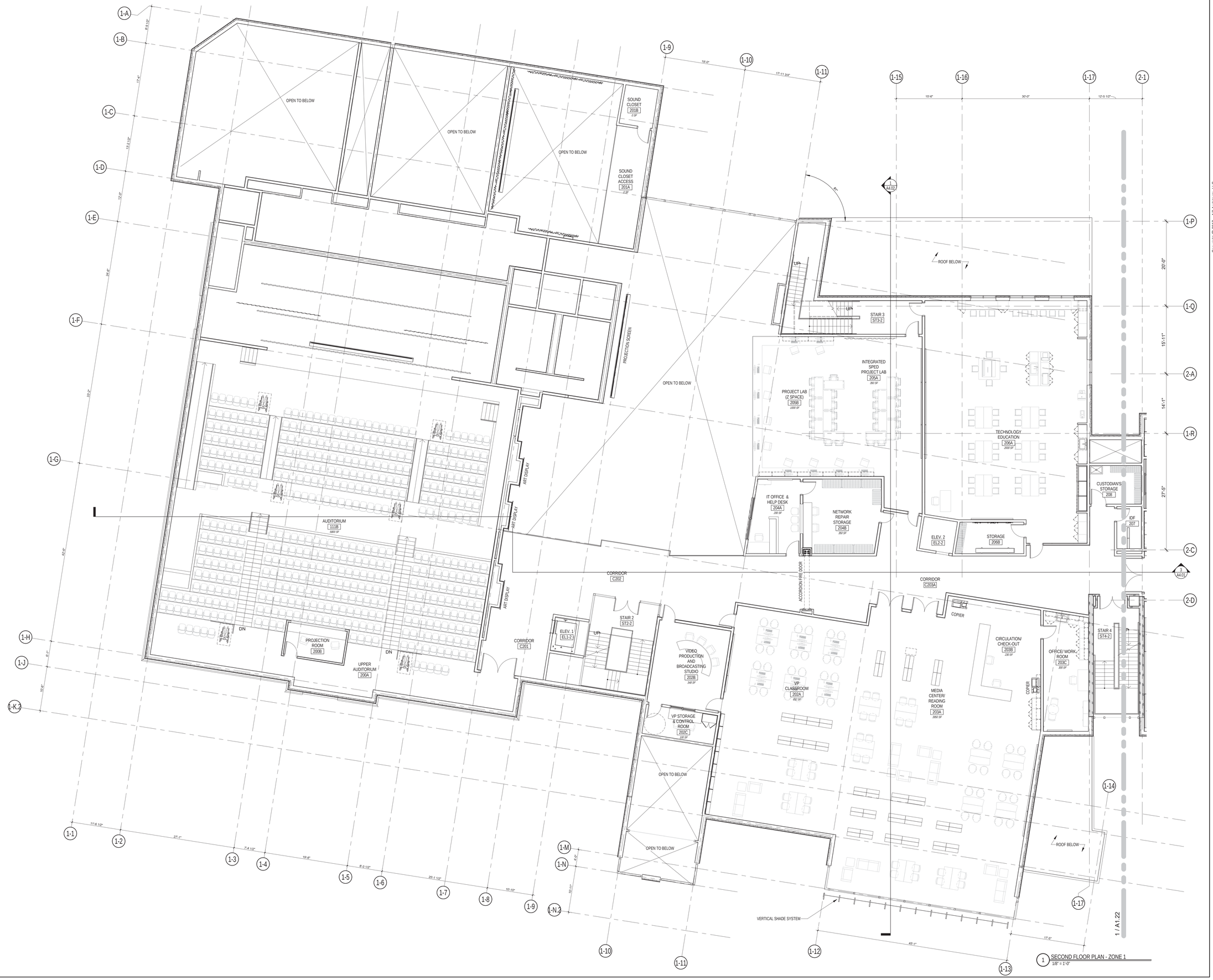

1 SECOND FLOOR PLAN - ZONE 1
1/8" = 1'-0"

architects
526 Boston Post Rd Wayland, MA
508.358.0790 www.ai3architects.com

Copyright © 2017 - AI3 Architects, LLC

KENNEDY MIDDLE SCHOOL
165 MILL STREET
NATICK, MA 01760

KEYNOTE LEGEND:

GENERAL NOTES:

1. FINISHED SECOND FLOOR ELEVATION 100'-0" ON ARCHITECTURAL DRAWINGS CORRESPONDS WITH ELEVATION 161'-0" ON THE CIVIL PLANS.
2. SECOND FLOOR PLAN ELEVATION 114'-0"

NORTH ARROW

SCHEMATIC DESIGN

KEYPLAN

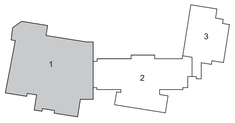

DRAWING NAME:

SECOND FLOOR PLAN
ZONE 1

DRAWN BY:	MJR/ HM/ SJL
REVIEWED BY:	JPT
SCALE:	As indicated
JOB NO.:	1605.00
DATE:	DEC. 21, 2017
DRAWING NUMBER:	A1.21

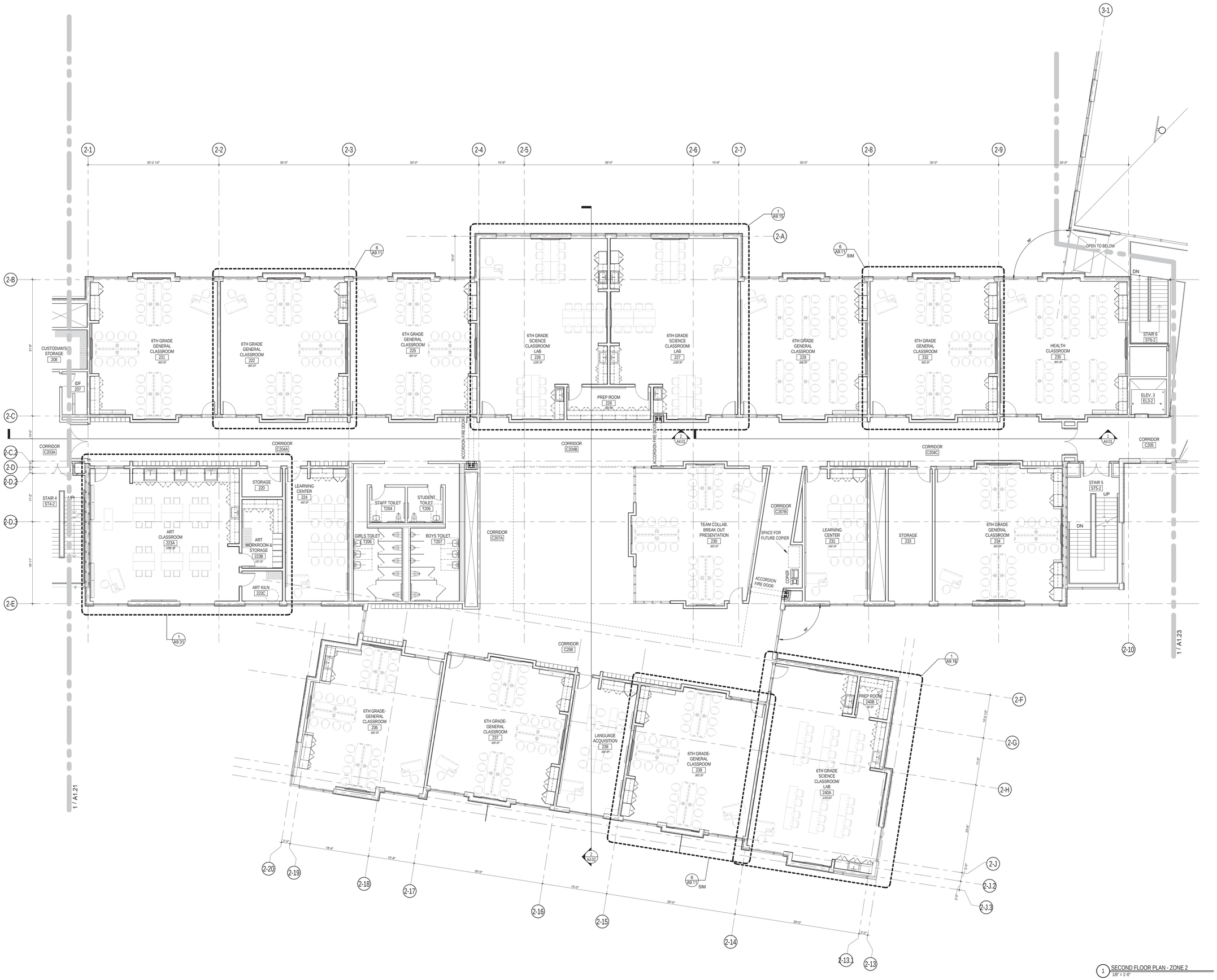

1 SECOND FLOOR PLAN - ZONE 2
1/8" = 1'-0"

526 Boston Post Rd Wayland, MA
508.358.0790 www.a13architects.com

Copyright © 2017 A13 Architects, LLC

KENNEDY MIDDLE SCHOOL
165 MILL STREET
NATICK, MA 01760

KEYNOTE LEGEND:

GENERAL NOTES:

1. FINISHED SECOND FLOOR ELEVATION 100'-0" ON ARCHITECTURAL DRAWINGS CORRESPONDS WITH ELEVATION 161'-0" ON THE CIVIL PLANS.
2. SECOND FLOOR PLAN ELEVATION 114'-0"

NORTH ARROW

SCHEMATIC DESIGN

KEYPLAN

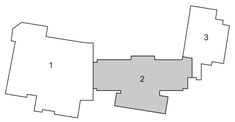

DRAWING NAME:

SECOND FLOOR PLAN
ZONE 2

DRAWN BY:	MJR/ HM/ SJL
REVIEWED BY:	JPT
SCALE:	As indicated
JOB NO.:	1605.00
DATE:	DEC. 21, 2017
DRAWING NUMBER:	A1.22

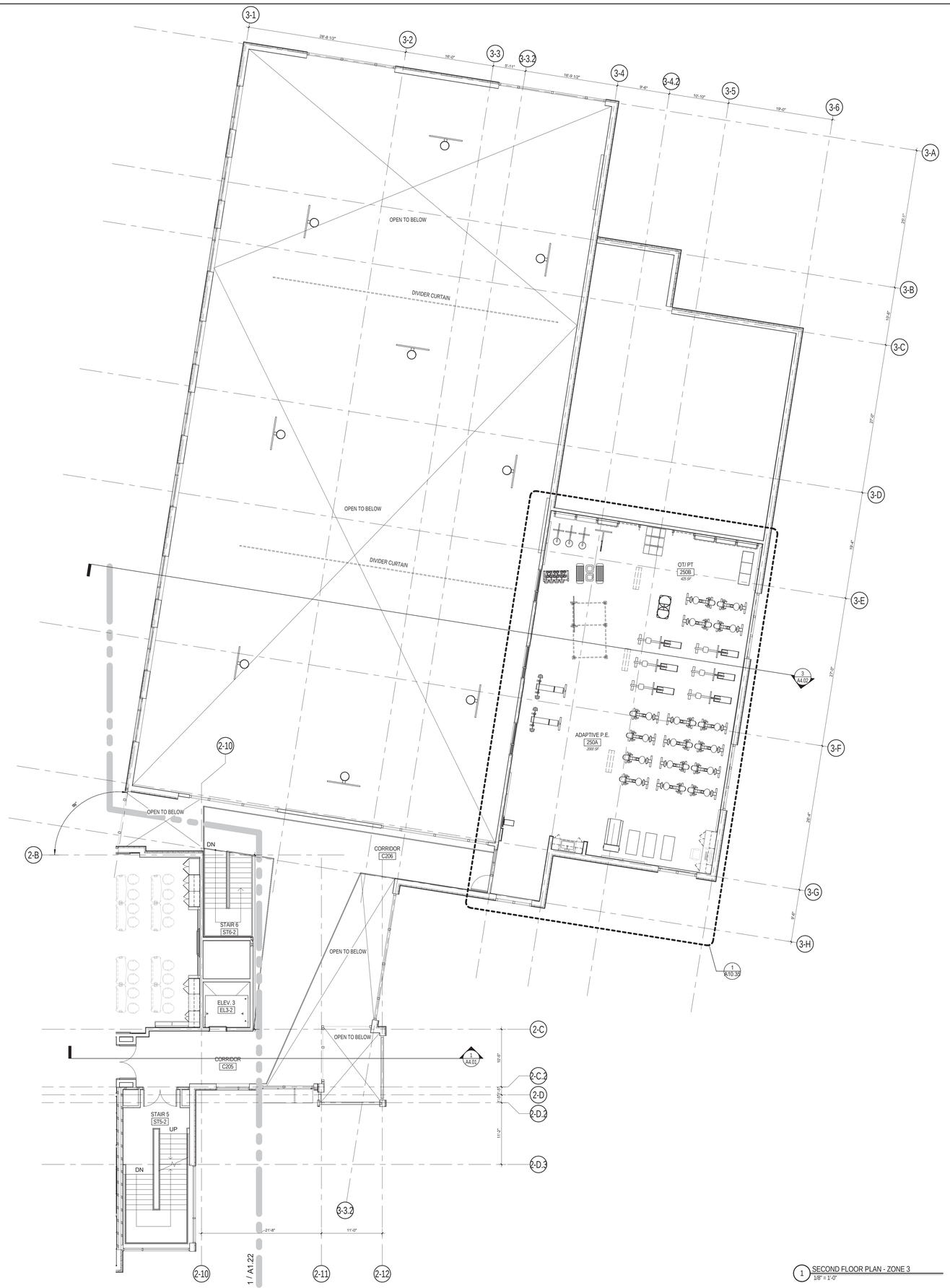

1 SECOND FLOOR PLAN - ZONE 3
1/8" = 1'-0"

526 Boston Post Rd
Wayland, MA
508.358.0790
www.ai3architects.com

Copyright © 2017 - AI3 Architects, LLC

KENNEDY MIDDLE SCHOOL
165 MILL STREET
NATICK, MA 01760

KEYNOTE LEGEND:

GENERAL NOTES:

1. FINISHED SECOND FLOOR ELEVATION 100'-0" ON ARCHITECTURAL DRAWINGS CORRESPONDS WITH ELEVATION 181'-0" ON THE CIVIL PLANS.
2. SECOND FLOOR PLAN ELEVATION 114'-0"

NORTH ARROW

SCHEMATIC DESIGN

KEYPLAN

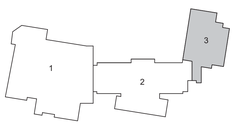

DRAWING NAME:

SECOND FLOOR PLAN
ZONE 3

DRAWN BY:	MJR/ HM/ SJL
REVIEWED BY:	JPT
SCALE:	As indicated
JOB NO.:	1605.00
DATE:	DEC. 21, 2017
DRAWING NUMBER:	A1.23

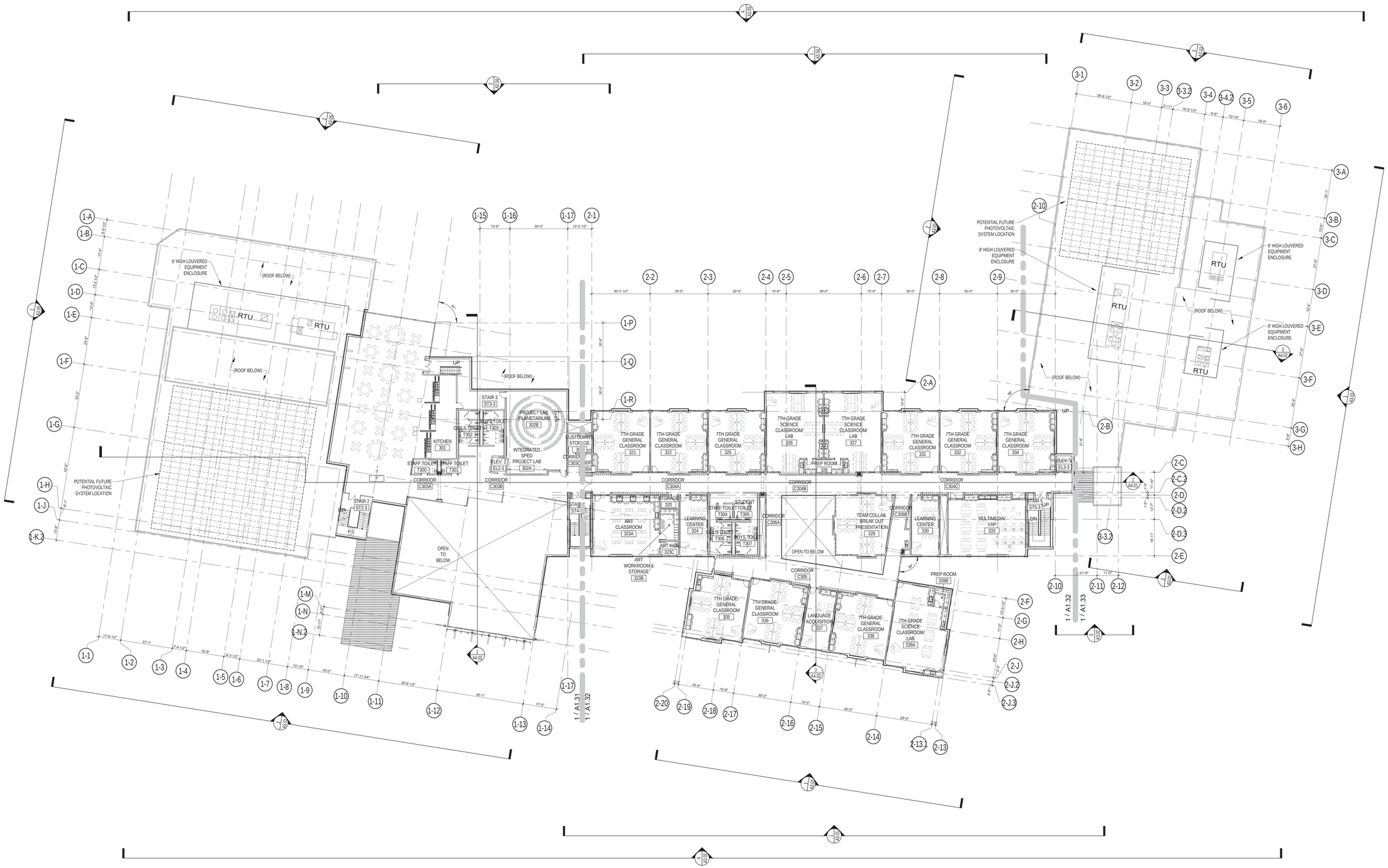

THIRD FLOOR PLAN
GROSS SQUARE FEET = 33,883 SF

1 OVERALL THIRD FLOOR PLAN
1" = 20'-0"

architects
526 Boston Post Rd Wayland, MA
508.358.0790 www.ai3architects.com

Copyright © 2017 - AI3 Architects, LLC

KENNEDY MIDDLE SCHOOL
165 MILL STREET
NATICK, MA 01760

KEYNOTE LEGEND:

GENERAL NOTES:

1. FINISHED THIRD FLOOR ELEVATION 100'-0" ON ARCHITECTURAL DRAWINGS CORRESPONDS WITH ELEVATION 161'-0" ON THE CIVIL PLANS.
2. THIRD FLOOR PLAN ELEVATION 128'-0"

NORTH ARROW

SCHEMATIC DESIGN

KEYPLAN

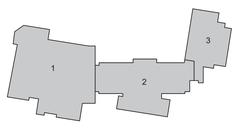

DRAWING NAME:

OVERALL THIRD FLOOR PLAN

DRAWN BY:	MJR/ HM/ SJL
REVIEWED BY:	JPT
SCALE:	As indicated
JOB NO.:	1605.00
DATE:	DEC. 21, 2017
DRAWING NUMBER:	A1.30

1 THIRD FLOOR PLAN - ZONE 1
1/8" = 1'-0"

A3 architects
526 Boston Post Rd
Wayland, MA
508.358.0790
www.a3architects.com

Copyright © 2017 - A3 Architects, LLC

KENNEDY MIDDLE SCHOOL
165 MILL STREET
NATICK, MA 01760

KEYNOTE LEGEND:

GENERAL NOTES:

1. FINISHED THIRD FLOOR ELEVATION 100'-0" ON ARCHITECTURAL DRAWINGS CORRESPONDS WITH ELEVATION 161'-0" ON THE CIVIL PLANS.
2. THIRD FLOOR PLAN ELEVATION 128'-0"

NORTH ARROW

SCHEMATIC DESIGN

KEYPLAN

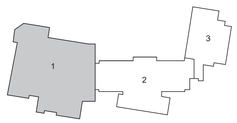

DRAWING NAME:

THIRD FLOOR PLAN
ZONE 1

DRAWN BY:	MJR/ HM/ SJL
REVIEWED BY:	JPT
SCALE:	As indicated
JOB NO.:	1605.00
DATE:	DEC. 21, 2017
DRAWING NUMBER:	A1.31

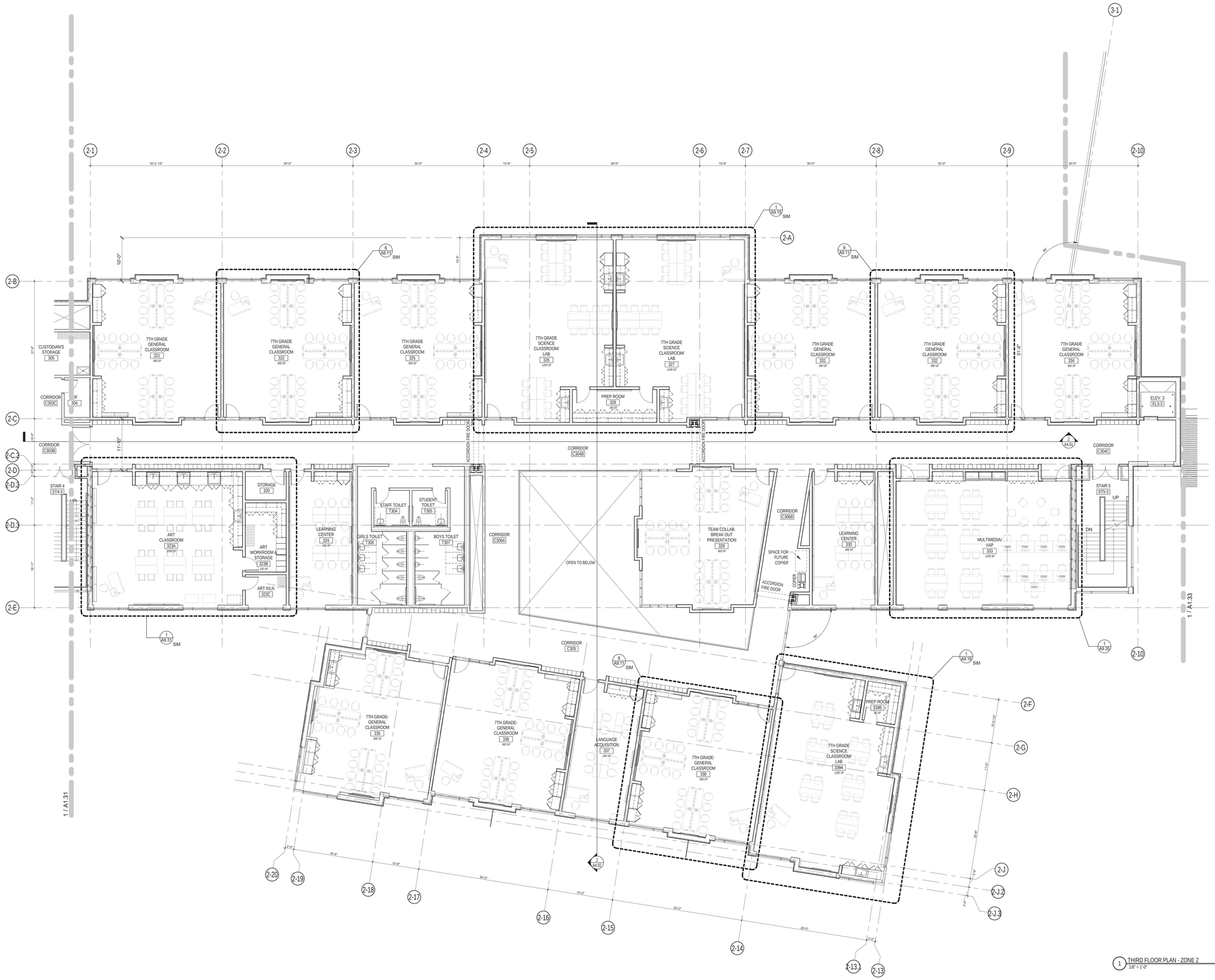

1 THIRD FLOOR PLAN - ZONE 2
1/8" = 1'-0"

A3 architects
526 Boston Post Rd
Wayland, MA
508.358.0790
www.a3architects.com

Copyright © 2017 - A3 Architects, LLC

KENNEDY MIDDLE SCHOOL
165 MILL STREET
NATICK, MA 01760

KEYNOTE LEGEND:

GENERAL NOTES:

1. FINISHED THIRD FLOOR ELEVATION 100'-0" ON ARCHITECTURAL DRAWINGS CORRESPONDS WITH ELEVATION 161'-0" ON THE CIVIL PLANS.
2. THIRD FLOOR PLAN ELEVATION 128'-0"

NORTH ARROW

SCHEMATIC DESIGN

KEYPLAN

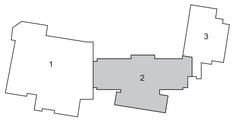

DRAWING NAME:

THIRD FLOOR PLAN
ZONE 2

DRAWN BY:	MJR/ HM/ SJL
REVIEWED BY:	JPT
SCALE:	As indicated
JOB NO.:	1605.00
DATE:	DEC. 21, 2017
DRAWING NUMBER:	A1.32

1 THIRD FLOOR PLAN - ZONE 3
1/8" = 1'-0"

526 Boston Post Rd
Wayland, MA
508.358.0790
www.ai3architects.com

Copyright © 2017 - Ai3 Architects, LLC

KENNEDY MIDDLE SCHOOL
165 MILL STREET
NATICK, MA 01760

KEYNOTE LEGEND:

GENERAL NOTES:

1. FINISHED THIRD FLOOR ELEVATION 100'-0" ON ARCHITECTURAL DRAWINGS CORRESPONDS WITH ELEVATION 181'-0" ON THE CIVIL PLANS.
2. THIRD FLOOR PLAN ELEVATION 128'-0"

NORTH ARROW

SCHEMATIC DESIGN

KEYPLAN

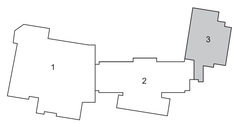

DRAWING NAME:

THIRD FLOOR PLAN
ZONE 3

DRAWN BY:	MJR/ HM/ SJL
REVIEWED BY:	JPT
SCALE:	As indicated
JOB NO.:	1605.00
DATE:	DEC. 21, 2017
DRAWING NUMBER:	A1.33

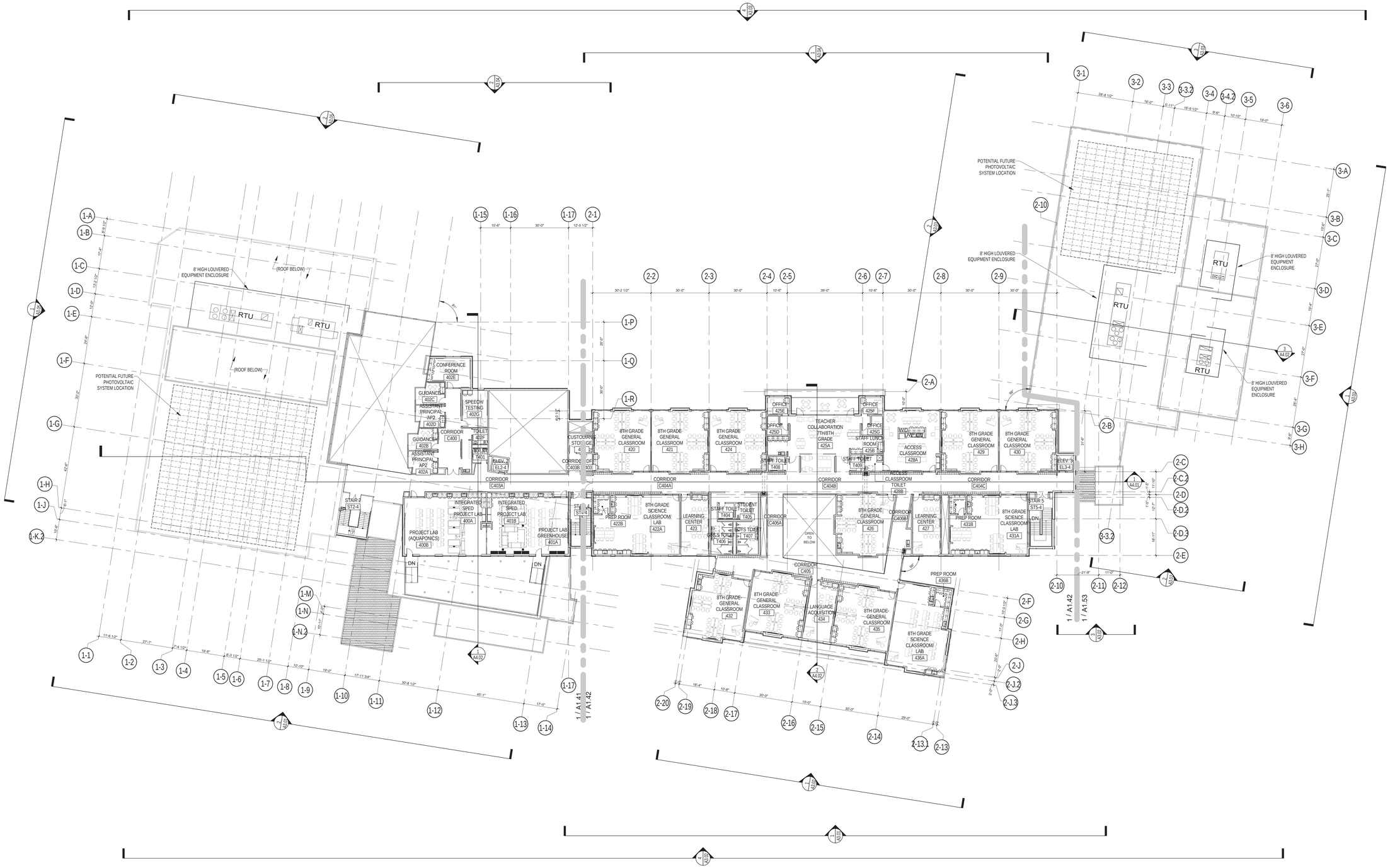

FOURTH FLOOR PLAN
GROSS SQUARE FEET = 30,675 SF

1 OVERALL FOURTH FLOOR PLAN
1" = 20'-0"

architects
526 Boston Post Rd Wayland, MA
508.358.0790 www.a3architects.com

Copyright © 2017 A3 Architects, LLC

KENNEDY MIDDLE SCHOOL
165 MILL STREET
NATICK, MA 01760

KEYNOTE LEGEND:

GENERAL NOTES:

1. FINISHED FOURTH FLOOR ELEVATION 100'-0" ON ARCHITECTURAL DRAWINGS CORRESPONDS WITH ELEVATION 161'-0" ON THE CIVIL PLANS.
2. FOURTH FLOOR PLAN ELEVATION 142'-0"

NORTH ARROW

SCHEMATIC DESIGN

KEYPLAN

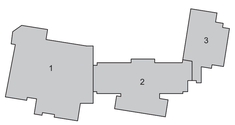

DRAWING NAME:

OVERALL FOURTH FLOOR PLAN

DRAWN BY:	MJR/ HM/ SJL
REVIEWED BY:	JPT
SCALE:	As indicated
JOB NO.:	1605.00
DATE:	DEC. 21, 2017
DRAWING NUMBER:	A1.40